City of Eastvale

Planning Commission Meeting Agenda
Staff Report

MEETING DATE: **JUNE 15, 2016**

TO: **PLANNING COMMISSION**

FROM: **KANIKA KITH, SENIOR PLANNER**

SUBJECT: **PROJECT NO. 15-1662 –** MINOR DEVELOPMENT REVIEW FOR THE INSTALLATION OF A NEW 50-FOOT-HIGH WIRELESS TELECOMMUNICATIONS TOWER, DISGUISED AS A MONOPALM, WITH ANCILLARY EQUIPMENT IN A 17-FOOT BY 19-FOOT LEASE AREA AT 8306 GRAPEWIN **(CONTINUED PUBLIC HEARING FROM MAY 18, 2016)**

RECOMMENDATION

Staff recommends that the Planning Commission adopt:

a. Resolution No. 16-_____ approving a Categorical Exemption pursuant to Section 15303(d), New Construction, of the California Environmental Quality Act (CEQA) for Minor Development Plan No. 15-1662; and

b. Resolution No. 16-_____ approving Minor Development Review No. 15-1662 for a new 50-foot-high wireless telecommunications tower, disguised as a palm tree, with ancillary equipment in a 17-foot by 19-foot lease area located at 8306 Grapewin Street (Assessor's Parcel Number 380-070-018) with access via an easement on an adjacent lot to the north (Assessor's Parcel Number 380-070-019), subject to conditions of approval.

BACKGROUND

This item is a continued public hearing from the May 18 Planning Commission meeting. A summary of that meeting is provided below; all of the information presented to the Commission prior to that meeting is attached to this staff report.

MAY 18 PUBLIC HEARING

Public Hearing

Following staff's and the applicant's presentation at the May 18 Planning Commission meeting, the public hearing on the proposed project was opened. Five residents spoke in opposition to the project and one resident spoke in support of the project.

- Five residents in opposition to the project expressed their concerns about the potential health impacts of the tower.[1]

- One resident spoke in support of the project, highlighting the benefits of better wireless reception for the community, such as better connection with families, friends, and public safety personnel.

Commission Deliberation and Discussion on May 18

After deliberating, two votes were taken:

- A motion was made by Commissioner Charlson (seconded by Commissioner Van Leeuwen) to deny the proposed project. A vote was taken, and the motion failed on a 1–2 vote.

- A subsequent motion was made by Commissioner Van Leeuwen (seconded by Vice Chair Feng) to continue the public hearing to the June 15 meeting so that the entire Commission could be present to hear testimony and take part in the decision-making process (Commissioners Oblea and Patel were absent from the May 18 meeting). A vote was taken, and the motion passed on a 3–0 vote, continuing the item to the June 15 Planning Commission meeting.

Additional Information for the June 15 Public Hearing

At the meeting, the Commission requested the following information:

- A revised site plan clarifying that the existing "structure" approximately 144 feet from the tower is an existing residence; and

- A map showing the location of all wireless facilities in the city.

The requested information is provided as an attachment to this report.

Staff has also prepared the following, based on the map of existing and proposed cell towers:

- The zoning for each wireless facility site; and

- Radii of 100 feet and 200 feet from each wireless tower to show the types of land uses that are near existing cell towers in Eastvale.

[1] Staff reminds the Commission that federal law prohibits denying wireless telecommunication facilities solely based on concerns about potential health impacts. The Commission may *consider* health impacts as one factor in voting for denial, but health impacts cannot be the *only* or the primary reason for denying the proposed facility.

NEW COMMENT RECEIVED

One letter in support of the project was received after the last Planning Commission meeting. The letter is included as an attachment to this report.

REQUIRED PROJECT FINDINGS

Listed below are the findings that the Commission must make in order to approve the project. Below each is staff's suggested findings for approval; the Commission may agree or disagree with staff's suggestions.

As noted earlier (and in the staff report for the May 18 meeting), staff has determined that all of the required findings can be made and recommends that the Commission approve the project. If the Commission disagrees, staff will request that the Commission indicate which findings cannot be made and why, so that a resolution for denial can be prepared.

Minor Development Review Findings

Eastvale Zoning Code Section 2.1 requires that the Planning Commission make the following findings in order to approve Minor Development Review. Staff has recommended the following findings for Planning Commission approval:

Finding 1: The proposed project is consistent with the General Plan and complies with applicable zoning regulations, specific plan provisions, and other applicable provisions adopted by the City.

Evidence: The zoning of the site is Light Agriculture (A-1), which is consistent with the site's land use designation of Low Density Residential (LDR). The proposed wireless facility is permitted in the A-1 zoning district subject to approval of a Minor Development Review. The proposed wireless antenna will also provide Eastvale residents with improved Verizon cellular service. The project is consistent with the requirements of the Zoning Code as outlined in Sections 2.1 and 4.14. It has been determined that the project conforms to City standards and requirements.

Finding 2: The proposed architecture, site design, and landscape are suitable for the purposes of the building and the site and will enhance the character of the neighborhood and community.

Evidence: The design of the facility is intended to simulate a palm tree to be harmonious with the existing environment along the Santa Ana River where several palm trees are present and in order to be consistent with the definition of a disguised facility. All mechanical equipment will be screened from view by an enclosed building constructed of decorative split-face block. Furthermore, new palm trees and landscaping will be planted around the proposed facility to help blend the disguised facility and to improve the site's existing (mostly unplanted dirt) character.

Finding 3: The architecture, including the character, scale, and quality of the design, relationship with the site and other buildings, building materials, colors, screening of exterior appurtenances, exterior lighting, and signing and similar elements, establishes a clear design concept and is compatible with the character of buildings on adjoining and nearby properties.

Evidence: The facility is designed and sited so that it is minimally intrusive to the surrounding area. All mechanical equipment will be screened from view by an enclosed building constructed of decorative split-face block; the tower will be designed to look like a palm tree. Thus, the proposed facility will not impact the character of the community.

Finding 4: The proposed project will not create conflicts with vehicular, bicycle, or pedestrian transportation modes of circulation.

Evidence: The wireless facility will be placed approximately 144 feet from the nearest habitable structure and located in the back (east) portion of the property so as not to impede future development of the site. Access to the site is via an access easement on the adjacent parcel to the north of the property, which will provide on-site access for monthly maintenance visits and not result in parking on the street. Therefore, the proposed facility will not create conflicts with existing vehicular, bicycle, or pedestrian circulation.

Finding 5: If the project is located within the Chino Airport Influence Area, the proposed project is consistent with the most recently adopted version of the Chino Airport Land Use Compatibility Plan.

Evidence: The project is not located within the Chino Airport Influence Area; thus, it is not subject to the Chino Airport Land Use Compatibility Plan.

Disguised Wireless Facility Findings

Eastvale Zoning Code Section 4.14, Disguised Wireless Communication Facilities, requires that the Planning Commission make the following findings in order to approve Minor Development Review 15-1662. Staff has recommended the following findings for Planning Commission approval:

Finding 1: The facility is designed and sited so as to be minimally visually intrusive.

Evidence: The proposed wireless facility, consisting of a 50-foot-high monopalm and ancillary ground-mounted equipment, is located at the rear of a large residential lot enclosed behind a 6-foot decorative block wall adjacent to the Santa Ana River. The proposed 17-foot by 19-foot enclosed equipment area is not visible from the street. Photosimulations provided by the applicant show that the top of the disguised monopalm will be only partially visible from the street because the monopalm will be screened by the existing residence and the tower will blend in with similar palm trees nearby.

Finding 2: Supporting equipment is located entirely within an equipment enclosure that is architecturally compatible with the surrounding area or is screened from view.

Evidence: All mechanical equipment will be screened from view by an enclosed building constructed of decorative split-face block. The enclosure will be located at the rear of the subject existing single-family residence, screening all equipment from public view. New palm trees and landscaping will be planted around the equipment enclosure to soften the enclosure wall and to help disguise the monopalm.

Finding 3: The application has met the processing requirements set forth in this article.

Evidence: The application has been reviewed for compliance with the requirements of Zoning Code Section 4.14 for processing of a disguised wireless facility. A notice was sent to property owners within a 600-foot radius of the project site.

Finding 4: The application has met the location and development standards set forth in this article.

Evidence: The facility will be 50 feet high, which is within the allowable height for a disguised wireless facility in the A-1 zone. The facility will be located 144 feet from the closest home on the adjacent lot, which exceeds the minimum setback requirement of 100 feet.

Finding 5: The application has met the requirements for approval set forth in Section 2.1 of this code.

Evidence: The application meets the requirements of Section 2.1 subsection B of the Zoning Code, which outlines the process and requirements for approval of a Minor Development Review. The findings of approval for the Minor Development Review for this project are listed above.

Finding 6: The Planning Director or approving body has either: (1) determined that notice to the Federal Aviation Administration is not required; or (2) received a determination of No Hazard to Air Navigation for the project issued by the Federal Aviation Administration.

Evidence: A letter provided by the applicant from the Federal Aviation Administration shows that the proposed monopalm is not located within the flight pattern of any nearby airports or private landing strips. Furthermore, the project is not subject to any additional Airport Land Use Commission reviews or determinations, as the property is not located within any airport influence areas.

RECOMMENDATION

Staff recommends Planning Commission adoption of the following:

- Resolution No. 16-_____ approving a Categorical Exemption pursuant to Section 15303(d), New Construction, of the California Environmental Quality Act (CEQA) for Minor Development Plan No. 15-1662; and

- Resolution No. 16-_____ approving Minor Development Review No. 15-1662 for a new 50-foot-high wireless telecommunications tower, disguised as a palm tree, with ancillary equipment in a 17-foot by 19-foot lease area located at 8306 Grapewin Street (Assessor's Parcel Number 380-070-018) with access via an easement on an adjacent lot to the north (Assessor's Parcel Number 380-070-019), subject to conditions of approval.

The Planning Commission's decision on this project is final, unless the decision is appealed to the City Council.

Planning Commission Options

The following alternatives are available to the Planning Commission:

1. Approve the project with additional changes and/or conditions.

2. Continue the public hearing and direct the applicant to make revisions.

3. Deny the project.

Staff's recommendation is that the Planning Commission approve the project.

FISCAL IMPACT

This project will not have a fiscal impact to the City of Eastvale because the cost of processing this application is fully paid for by the applicant and will not burden the City financially.

ATTACHMENTS

1. Resolution
2. Wireless Facilities List and Maps
3. Revised Site Plan
4. New Comment Received
5. May 18, 2016, Planning Commission Staff Report

Prepared by: Kanika Kith, Senior Planner
Reviewed by: Eric Norris, Planning Director
John Cavanaugh, City Attorney

ATTACHMENT 1

RESOLUTION

PC RESOLUTION NO. 16-____

A RESOLUTION OF THE PLANNING COMMISSION OF THE CITY OF EASTVALE, CALIFORNIA, APPROVING MINOR DEVELOPMENT REVIEW NO. 15-1662 FOR THE INSTALLATION OF A NEW WIRELESS TELECOMMUNICATIONS FACILITY THAT WILL BE DISGUISED AS A 50-FOOT-TALL MONOPALM AND ANCILLARY EQUIPMENT LOCATED AT 8306 GRAPEWIN STREET (ASSESSOR'S PARCEL NUMBER 130-070-018) AND ACCESS VIA AN ADJACENT PARCEL TO THE NORTH (ASSESSOR'S PARCEL NUMBER 130-070-019)

WHEREAS, an application for a Minor Development Review (15-1662) for the installation of a new 50-foot-high wireless telecommunications pole disguised as a monopalm and ancillary equipment in an 17-foot by 19-foot lease area behind an existing single-family home located at 8306 Grapewin Street in Eastvale, Assessor's Parcel Number 130-070-018, and access to service the proposed facility via adjacent parcel to the north, Assessor's Parcel Number 130-070-019, has been filed by Verizon Wireless; and

WHEREAS, the proposed Minor Development Review is considered a project as defined by the California Environmental Quality Act (CEQA), Public Resources Code Section 21000 et seq.; and

WHEREAS, the Planning Director determined that the project qualifies for a Categorical Exemption from the provisions of CEQA per Section 15303(d), New Construction, of the CEQA Guidelines; and

WHEREAS, the City of Eastvale Planning Department on May 8, 2016, published a legal notice in the *Press Enterprise*, a local paper of general circulation, indicating the date and time of the public hearing in compliance with state law concerning Minor Development Review No. 15-1662, and mailed said public hearing notice to each property owner within a 600-foot radius of the project site in accordance with state law; and

WHEREAS, the City of Eastvale Planning Commission conducted a duly noticed public hearing on May 18, 2016, at which time it received public testimony concerning Minor Development Review No. 15-1662, considered a CEQA Categorical Exemption for the proposed project and the proposed Minor Development Review for the Verizon wireless telecommunications facility, and continued the public hearing to the next Planning Commission on June 15, 2016; and

WHEREAS, the City of Eastvale Planning Commission conducted a duly noticed public hearing on June 15, 2016, at which time it received public testimony concerning Minor Development Review No. 15-1662 and considered a CEQA Categorical Exemption for the proposed project and the proposed Minor Development Review for the Verizon wireless telecommunications facility.

NOW, THEREFORE, the Planning Commission of the City of Eastvale does hereby resolve, determine, and order as follows:

SECTION 1. ENVIRONMENTAL FINDINGS

Pursuant to CEQA, within the meaning of Public Resources Code Sections 21080(e) and 21082.2 within the record and/or provided at the public hearing, the Planning Commission hereby finds and determines that the project was adequately analyzed according to the CEQA Guidelines and qualified for an Exemption under Section 15303(d), New Construction, as supported by the following findings and evidence:

Finding: The proposed project is exempt from further environmental review requirements contained in CEQA pursuant to Section 15303(d), New Construction.

Evidence: The proposed project will extend wireless telecommunication utilities. The proposed project will not result in damage to scenic resources including but not limited to trees, historic buildings, rock outcroppings, or similar resources within a highway officially designated as a state scenic highway. The proposed project is not located on a site that is included on any list compiled pursuant to Section 65962.5 of the Government Code, and the project will not cause a substantial change in the significance of a historical resource. In consideration of this, staff has determined that the project satisfies the requirements of a Categorical Exemption pursuant to CEQA Section 15303(d), New Construction, and is determined to be exempt from further environmental review requirements contained in CEQA.

SECTION 2. MULTIPLE SPECIES HABITAT CONSERVATION PLAN (MSHCP)

The project is found to be consistent with the MSHCP. The project is located outside of any MSHCP criteria area, and mitigation is provided through payment of the MSHCP Mitigation Fee.

SECTION 3. MINOR DEVELOPMENT REVIEW FINDINGS

Pursuant to Eastvale Zoning Code Section 2.1, the Planning Commission hereby finds and determines as follows:

Finding 1: The proposed project is consistent with the General Plan and complies with applicable zoning regulations, specific plan provisions, and other applicable provisions adopted by the City.

Evidence: The zoning of the site is Light Agriculture (A-1), which is consistent with the site's land use designation of Low Density Residential (LDR). The proposed wireless facility is permitted in the A-1 zoning district subject to approval of a Minor Development Review. The proposed wireless antenna will also provide Eastvale residents with improved Verizon cellular service. The project is consistent with the requirements of the Zoning Code as outlined in Sections 2.1 and 4.14. It has been determined that the project conforms to City standards and requirements.

Finding 2: The proposed architecture, site design, and landscape are suitable for the purposes of the building and the site and will enhance the character of the neighborhood and community.

Evidence: The design of the facility is intended to simulate a palm tree to be harmonious with the existing environment along the Santa Ana River where several palm trees are present and in order to be consistent with the definition of a disguised facility. All mechanical equipment will be

screened from view by an enclosed building constructed of decorative split-face block. Furthermore, new palm trees and landscaping will be planted around the proposed facility to help blend the disguised facility and to improve the site's existing (mostly unplanted dirt) character.

Finding 3: The architecture, including the character, scale, and quality of the design, relationship with the site and other buildings, building materials, colors, screening of exterior appurtenances, exterior lighting, and signing and similar elements, establishes a clear design concept and is compatible with the character of buildings on adjoining and nearby properties.

Evidence: The facility is designed and sited so that it is minimally intrusive to the surrounding area. All mechanical equipment will be screened from view by an enclosed building constructed of decorative split-face block; the tower will be designed to look like a palm tree. Thus, the proposed facility will not impact the character of the community.

Finding 4: The proposed project will not create conflicts with vehicular, bicycle, or pedestrian transportation modes of circulation.

Evidence: The wireless facility has been placed at approximately 144 feet from the nearest habitable structure and located in the back (east) portion of the property so as not to impede future development of the site. Access to the site is via an access easement on the adjacent parcel to the north of the property, which will provide on-site access for monthly maintenance visits and not result in parking on the street. Therefore, the proposed facility will not create conflicts with existing vehicular, bicycle, or pedestrian circulation.

Finding 5: If the project is located within the Chino Airport Influence Area, the proposed project is consistent with the most recently adopted version of the Chino Airport Land Use Compatibility Plan.

Evidence: The project is not located within the Chino Airport Influence Area; thus, it is not subject to the Chino Airport Land Use Compatibility Plan.

SECTION 4. DISGUISED WIRELESS FACILITY FINDINGS

Pursuant to Eastvale Zoning Code Section 4.14, the Planning Commission hereby finds and determines as follows:

Finding 1: The facility is designed and sited so as to be minimally visually intrusive.

Evidence: The proposed wireless facility, consisting of a 50-foot-high monopalm and ancillary ground-mounted equipment, is located at the rear of a large residential lot enclosed behind a 6-foot decorative block wall adjacent to the Santa Ana River. The proposed 17-foot by 19-foot enclosed equipment area is not visible from the street. Photosimulations provided by the applicant show that the top of the disguised monopalm will be only partially visible from the street because the monopalm will be screened by the existing residence and the tower will blend in with similar palm trees nearby.

Finding 2: Supporting equipment is located entirely within an equipment enclosure that is architecturally compatible with the surrounding area or is screened from view.

Evidence: All mechanical equipment will be screened from view by an enclosed building constructed of decorative split-face block. The enclosure will be located at the rear of the subject existing single-family residence, screening all equipment from public view. New palm trees and landscaping will be planted around the equipment enclosure to soften the enclosure wall and to help disguise the monopalm.

Finding 3: The application has met the processing requirements set forth in this article.

Evidence: The application has been reviewed for compliance with the requirements of Zoning Code Section 4.14 for processing of a disguised wireless facility. A notice was sent to property owners within a 600-foot radius of the project site.

Finding 4: The application has met the location and development standards set forth in this article.

Evidence: The facility will be 50 feet high, which is within the allowable height for a disguised wireless facility in the A-1 zone. The facility will be located 144 feet from the closest home on the adjacent lot, which exceeds the minimum setback requirement of 100 feet.

Finding 5: The application has met the requirements for approval set forth in Section 2.1 of this code.

Evidence: The application meets the requirements of Section 2.1 subsection B of the Zoning Code, which outlines the process and requirements for approval of a Minor Development Review. The findings of approval for the Minor Development Review for this project are listed above.

Finding 6: The Planning Director or approving body has either: (1) determined that notice to the Federal Aviation Administration is not required; or (2) received a determination of No Hazard to Air Navigation for the project issued by the Federal Aviation Administration.

Evidence: A letter provided by the applicant from the Federal Aviation Administration shows that the proposed monopalm is not located within the flight pattern of any nearby airports or private landing strips. Furthermore, the project is not subject to any additional Airport Land Use Commission reviews or determinations, as the property is not located within any airport influence areas.

SECTION 5. PLANNING COMMISSION ACTION

Based on the findings outlined in Sections 1 through 4 above, the Planning Commission of the City of Eastvale hereby takes the following actions:

1. Adopt Resolution No. 16-____ to approve a Categorical Exemption pursuant to Section 15303(d), New Consrtuction, of the California Environmental Quality Act for Minor Development Plan No. 15-1662; and

2. Adopt Resolution 16-____ to approve Minor Development Review No. 15-1662 for the installation of a new 50-foot-high wireless telecommunications facility disguised as a monopalm and associated equipment in a 17-foot by 19-foot lease area located at 8306 Grapewin Street (Assessor's Parcel Number 130-070-018) with an access easement on the

adjacent parcel to the north (Assessor's Parcel Number 130-070-019) to service the facility, subject to conditions of approval attached hereto as Exhibit A.

PASSED, APPROVED, AND ADOPTED this 15th day of June, 2016.

_____
Larry Oblea, Chair

APPROVED AS TO FORM:

_____
John E. Cavanaugh, City Attorney

ATTEST:

_____
Marc Donohue, Secretary

STATE OF CALIFORNIA)
COUNTY OF RIVERSIDE) §
CITY OF EASTVALE)

I, Marc Donohue, Secretary of the Planning Commission of the City of Eastvale, California, do hereby certify that the foregoing Planning Commission Resolution, No. 16-____, was duly adopted by the Planning Commission of the City of Eastvale, California, at a regular meeting thereof held on the 15th day of June, 2016, by the following vote, to wit:

AYES:

NOES:

ABSENT:

ABSTAIN:

_____
Marc Donohue, Secretary

EXHIBIT A

Conditions of Approval

ATTACHMENT 2

WIRELESS FACILITIES LIST AND MAPS

List of Cell Towers in Eastvale

	Status	Facility Type	Carrier	Location	Exisiting Use	Zone Designation
1	Existing	Monopole	Verizon	12423 Riverside Dr.	Crossroads Truck and Auto Salvage Yard	M-M Manufacturing - Medium
2	Existing	Monopole	Verizon	5800 Hamner Ave.	Mobile Home Park	R-T Mobile Home Subdivision & Mobile Home Park
3	Existing	Disguised Tree	Verizon	6411 Rolling Meadow St.	Recreational Park - James C Huber Park	PRD - Planned Residential Development
4	Existing	Field Light Standard	Verizon, T-Mobile, Metro PCS	13099 65th St.	Recreational Park - Harada Heritage Park	PRD - Planned Residential Development
5	Existing	Field Light Standard	Verizon	7450 Eastvale Parkway	Recreational Park - McCune Family Park	Eastvale SP No. 300
6	Existing	Disguised Water Tank	Verizon, T-Mobile, AT&T	14604 Promontory Ln.	Cell Tower Faciltiy	R-1 One-Family Dwellings
7	Existing	Concealed in Building Cupola	Verizon	12732 Limonite Ave.	Cloverdale Marketplace - On top of Dental office	C-1 / C-P General Commercial
8	Existing	Disguised Pine Tree	Verizon, Sprint	14950 / 14952 River Rd.	Empty Field / OC Flood Control District	A-2 Heavy Agriculture
9	Proposed	Field Light Standard	Verizon, T-Mobile, Metro PCS	7325 Woodpigeon Rd.	Recreational Park - Providence Ranch Park	Eastvale SP No. 300
10	Proposed	Field Light Standard	Verizon	12750 Citrus St.	Recreational Park - Community Park Phase II	W - 1 Watercourse, Watershed, and Conservation Areas
11	Proposed	Disguised Palm Tree	Verizon	8306 Grapewin	Single Family Home	A-1 Light Agriculture
12	Existing	Disguised Palm Tree	Sprint	12475 Harvest Dr.	Walmart Distribution Center	M-SC Manufacturing - Service Commercial
13	Existing	Disguised Palm Tree	Sprint	7155 Hamner Ave.	New Day Church	R-1 One-Family Dwellings
14	Existing	Monopole	T-Mobile, Metro PCS	5900 Festival Way	Recreational Park - Orchard Park	PRD - Planned Residential Development
15	Under Construction	Disguised Pine Tree	AT&T	14700 River Rd.	Western Riverside County Regional Wastewater Authority	A-2 Heavy Agriculture

Note: The locations of the existing cell towers were determined based on a number of factors, including:

- Gaps in coverage
- Availability of existing tall structures (such as lighting poles at public parks) on which to place antennae
- Conformance with the Eastvale Zoning Code

Although some towers are located farther from homes than the proposed Verizon facility on Grapewin, their locations were not chosen due to health concerns.

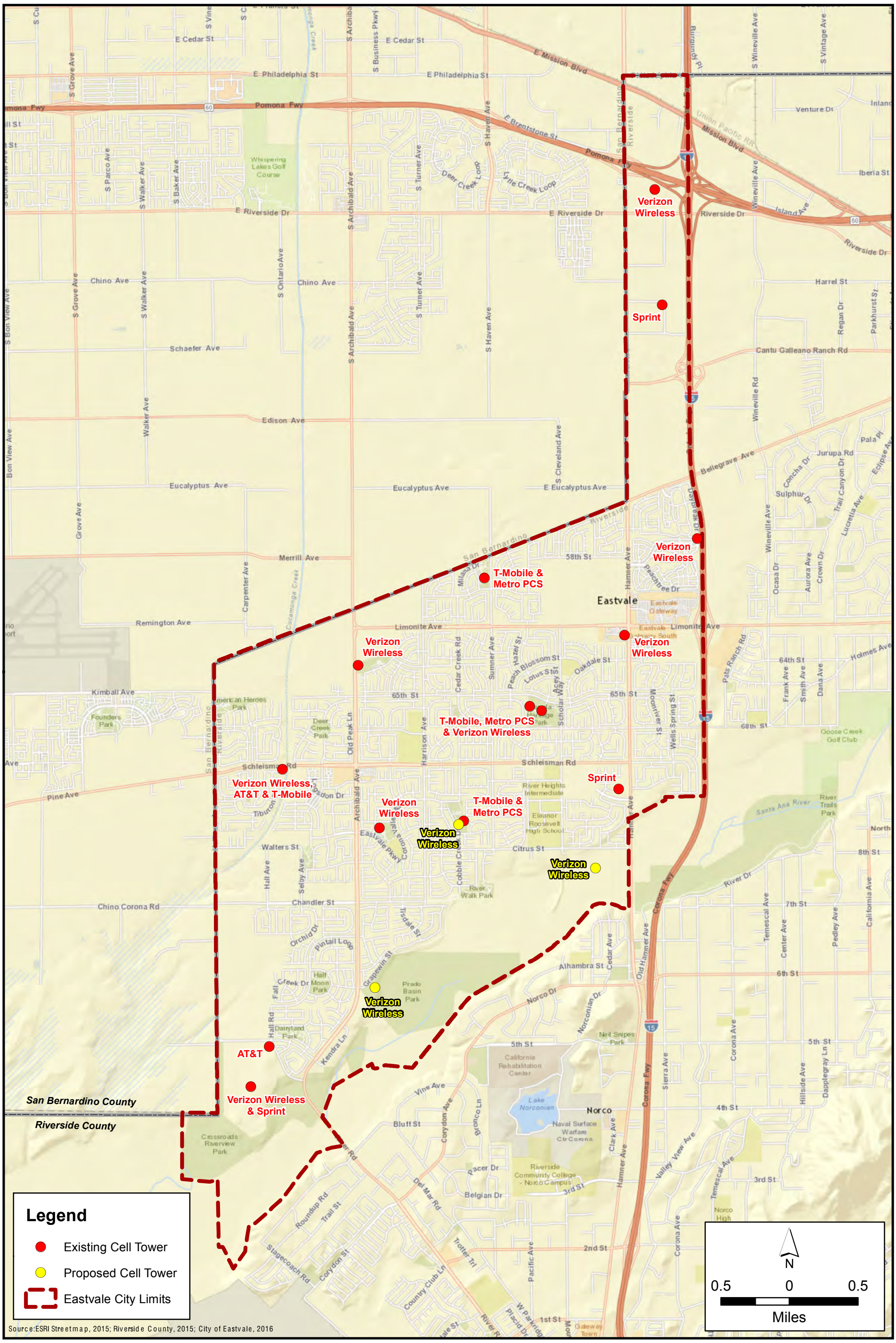

Figure 1

Existing and Proposed Cell Tower Facilities within the City of Eastvale

T:_GIS\Riverside_County\MXDs\Eastvale\Cell Tower Citywide\radius_1.mxd (6/3/2016)

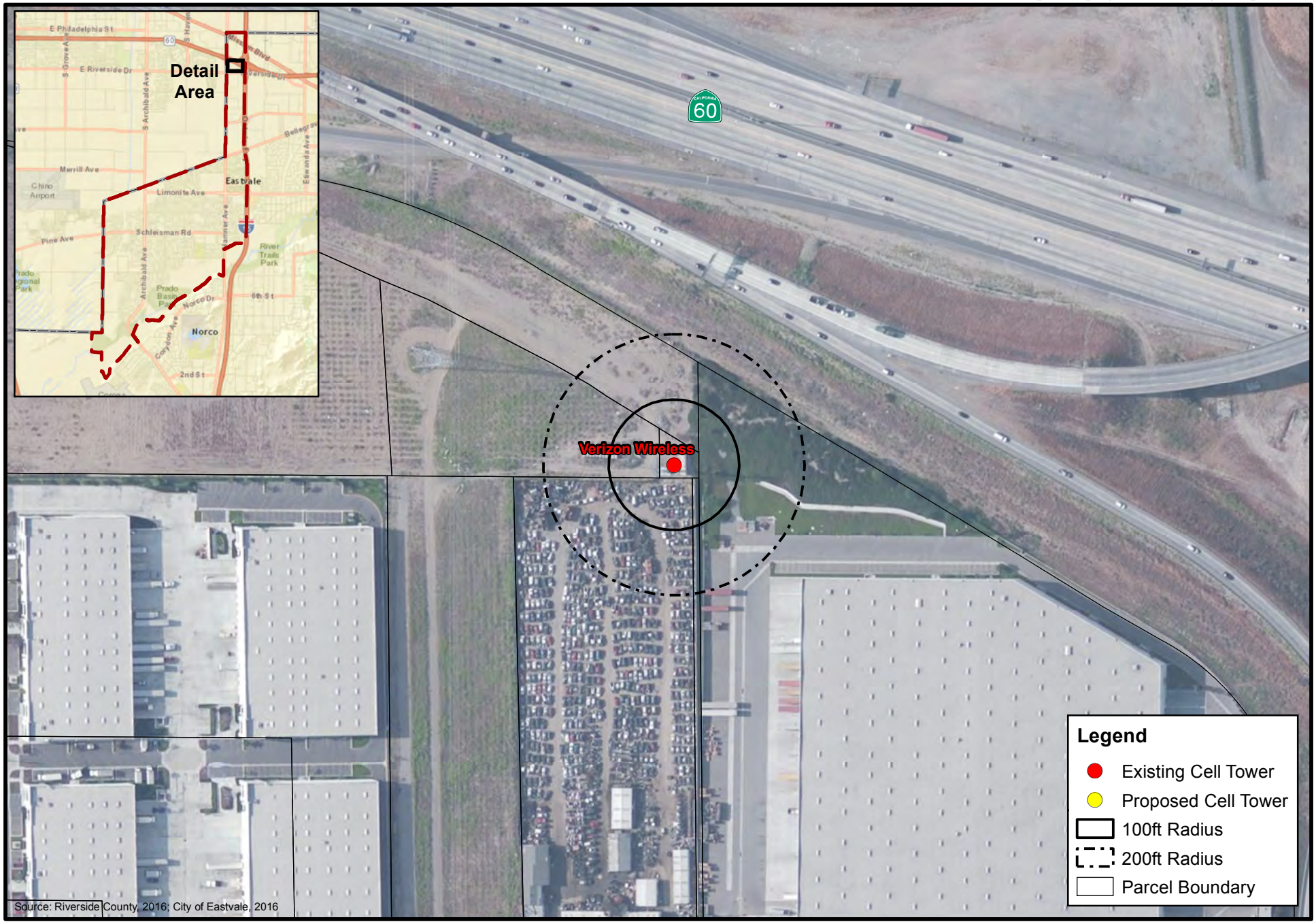

N

100 50 0 100

Feet

Figure 2

100ft and 200ft Radius from Cell Tower

T:_GIS\Riverside_County\MXDs\Eastvale\Cell Tower Citywide\radius_2.mxd (6/3/2016)

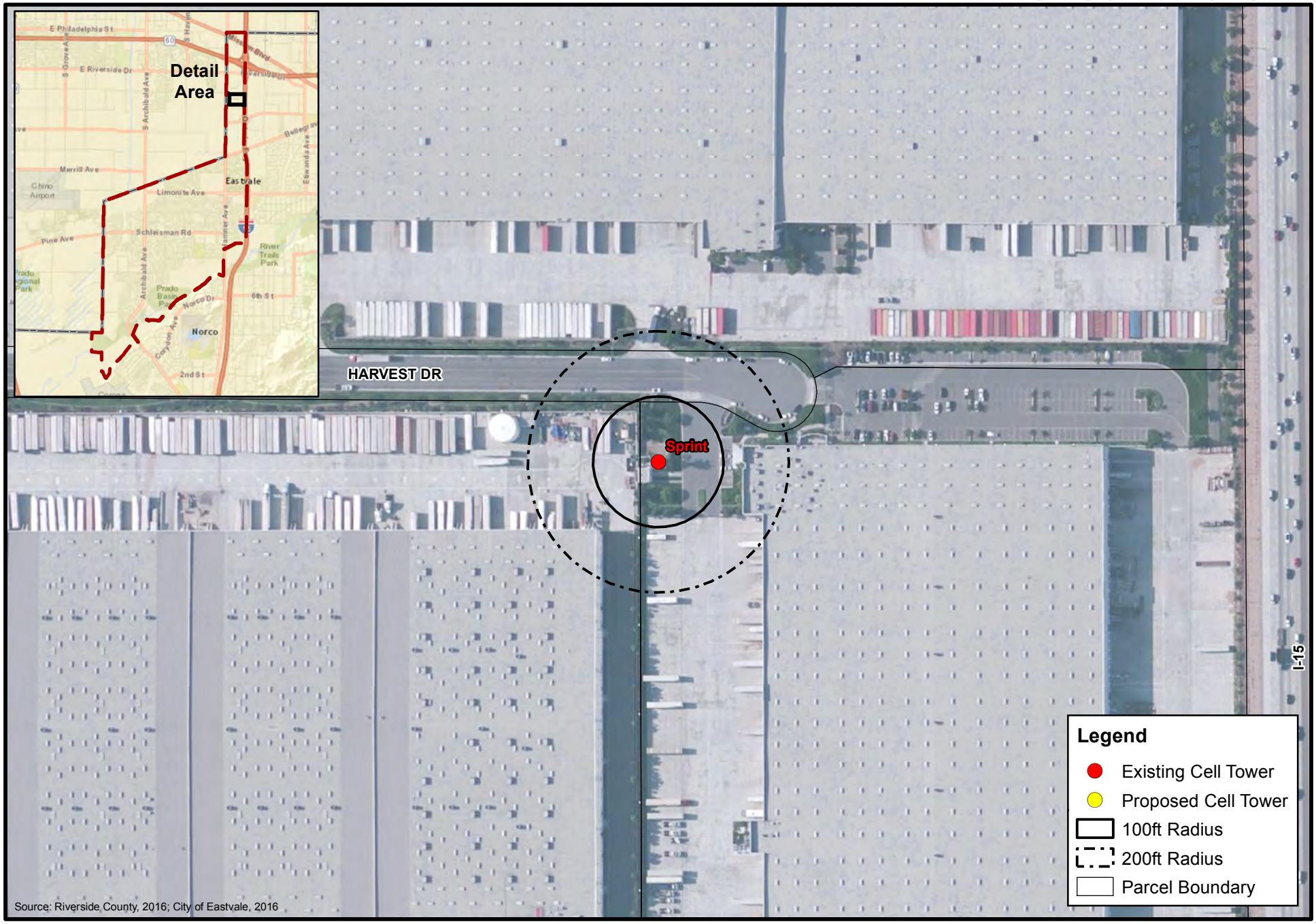

N

100 50 0 100

Feet

Figure 3

100ft and 200ft Radius from Cell Tower

T:_GIS\Riverside_County\MXDs\Eastvale\Cell Tower Citywide\radius_3.mxd (6/3/2016)

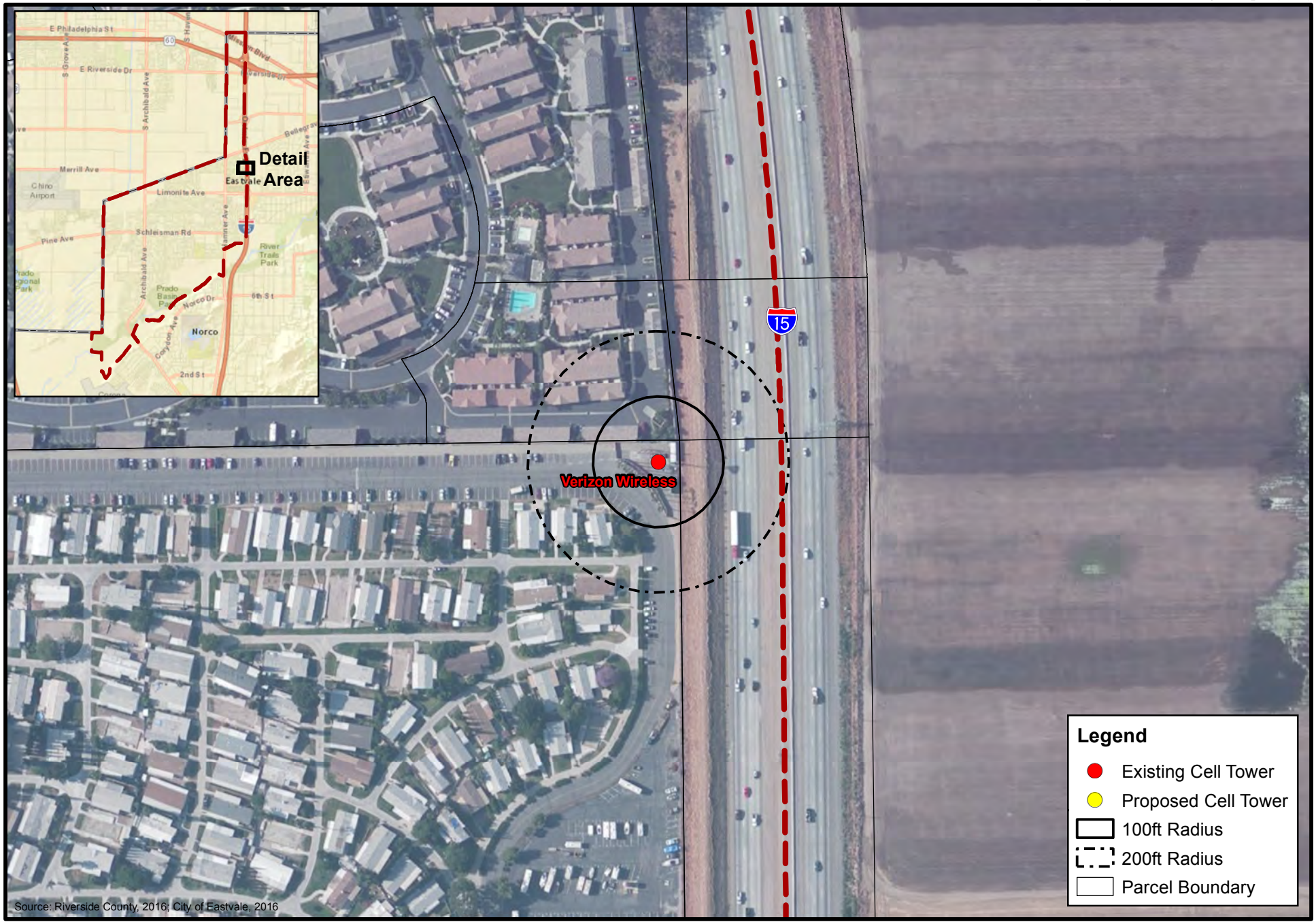

N

100 50 0 100

Feet

Figure 4

100ft and 200ft Radius from Cell Tower

T:_GIS\Riverside_County\MXDs\Eastvale\Cell Tower Citywide\radius_4.mxd (6/3/2016)

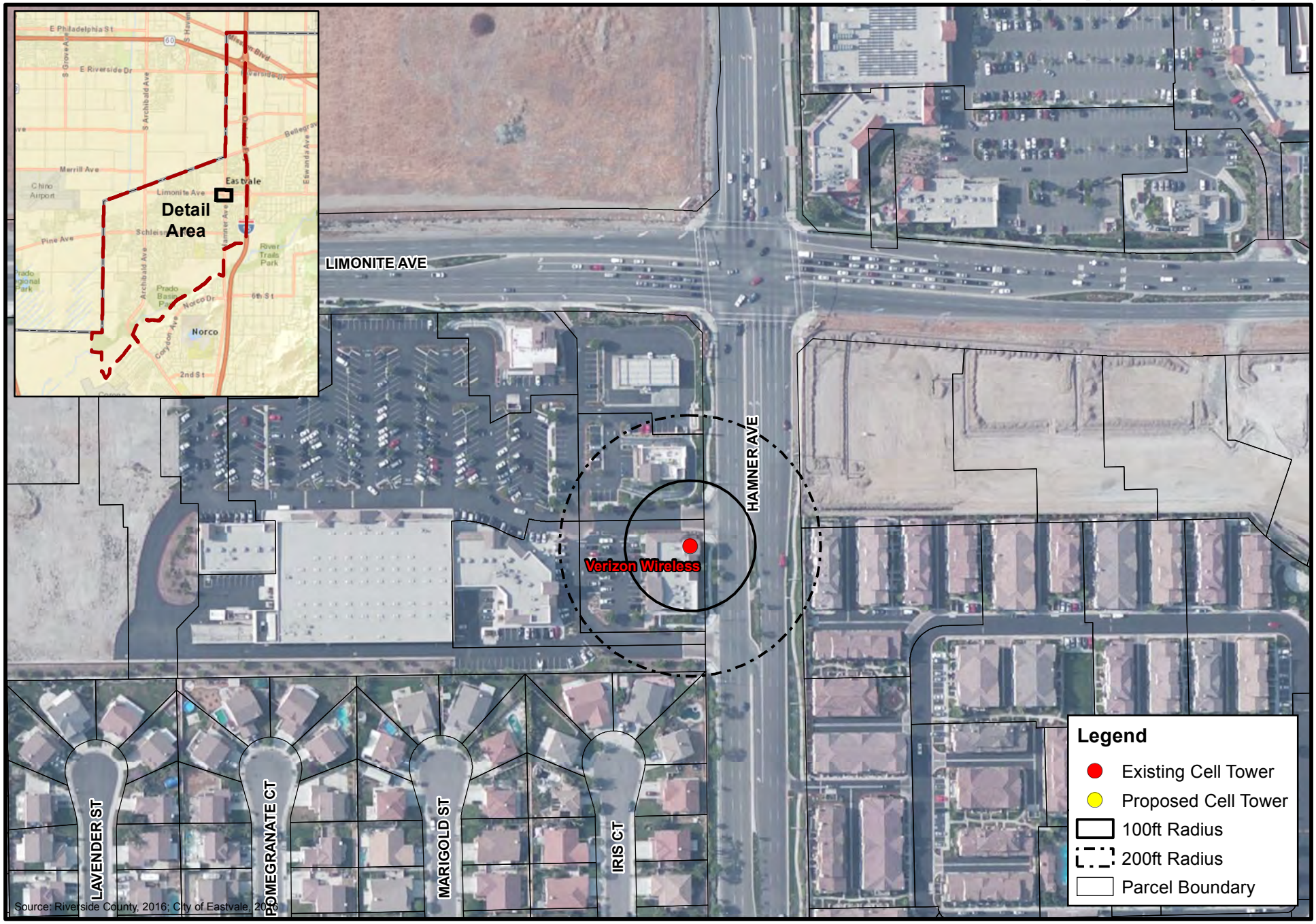

N

100 50 0 100

Feet

Figure 5

100ft and 200ft Radius from Cell Tower

T:_GIS\Riverside_County\MXDs\Eastvale\Cell Tower Citywide\radius_5.mxd (6/3/2016)

N

100 50 0 100

Feet

Figure 6

100ft and 200ft Radius from Cell Tower

T:_GIS\Riverside_County\MXDs\Eastvale\Cell Tower Citywide\radius_6.mxd (6/3/2016)

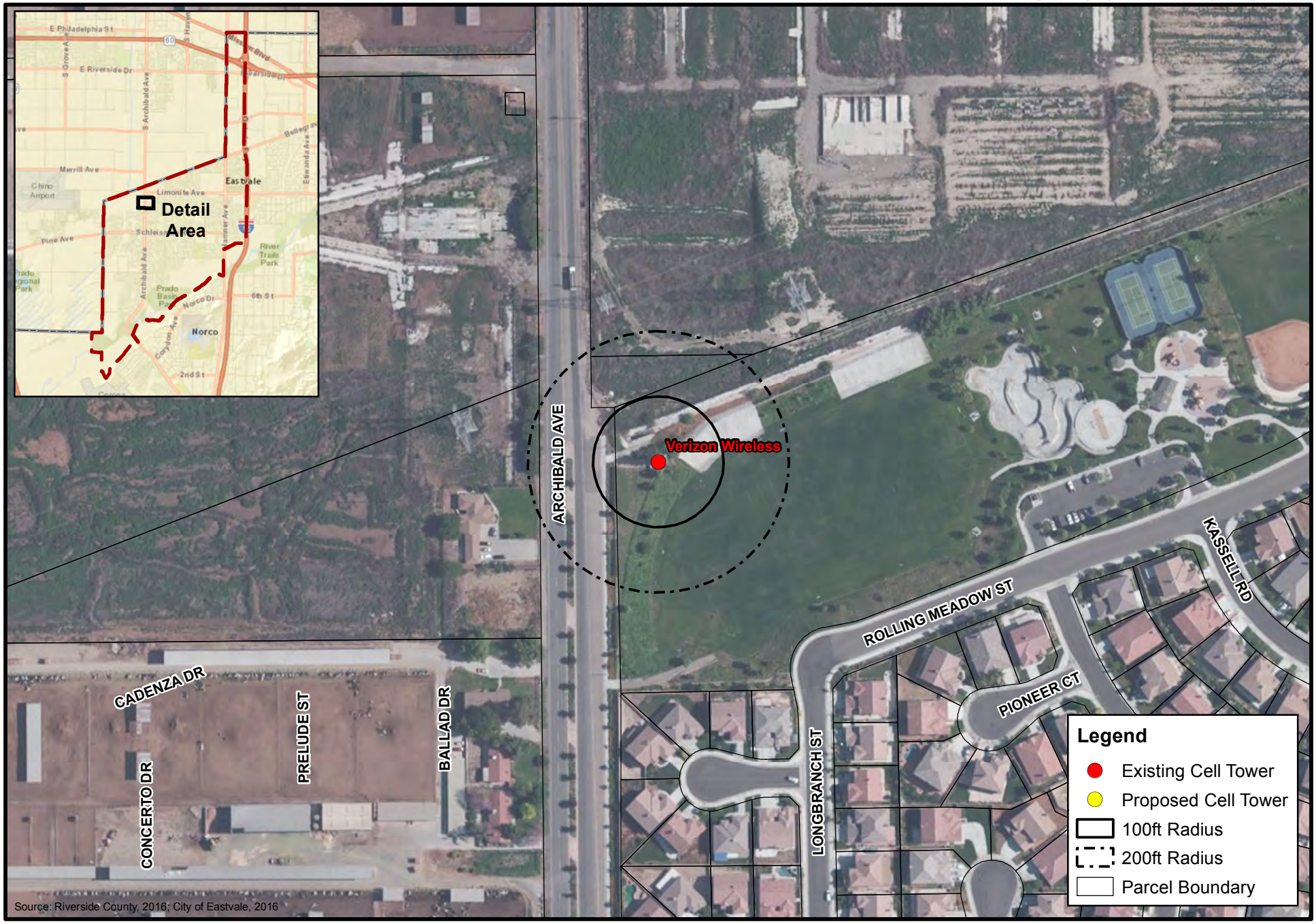

N

100 50 0 100

Feet

Figure 7

100ft and 200ft Radius from Cell Tower

T:_GIS\Riverside_County\MXDs\Eastvale\Cell Tower Citywide\radius_7.mxd (6/3/2016)

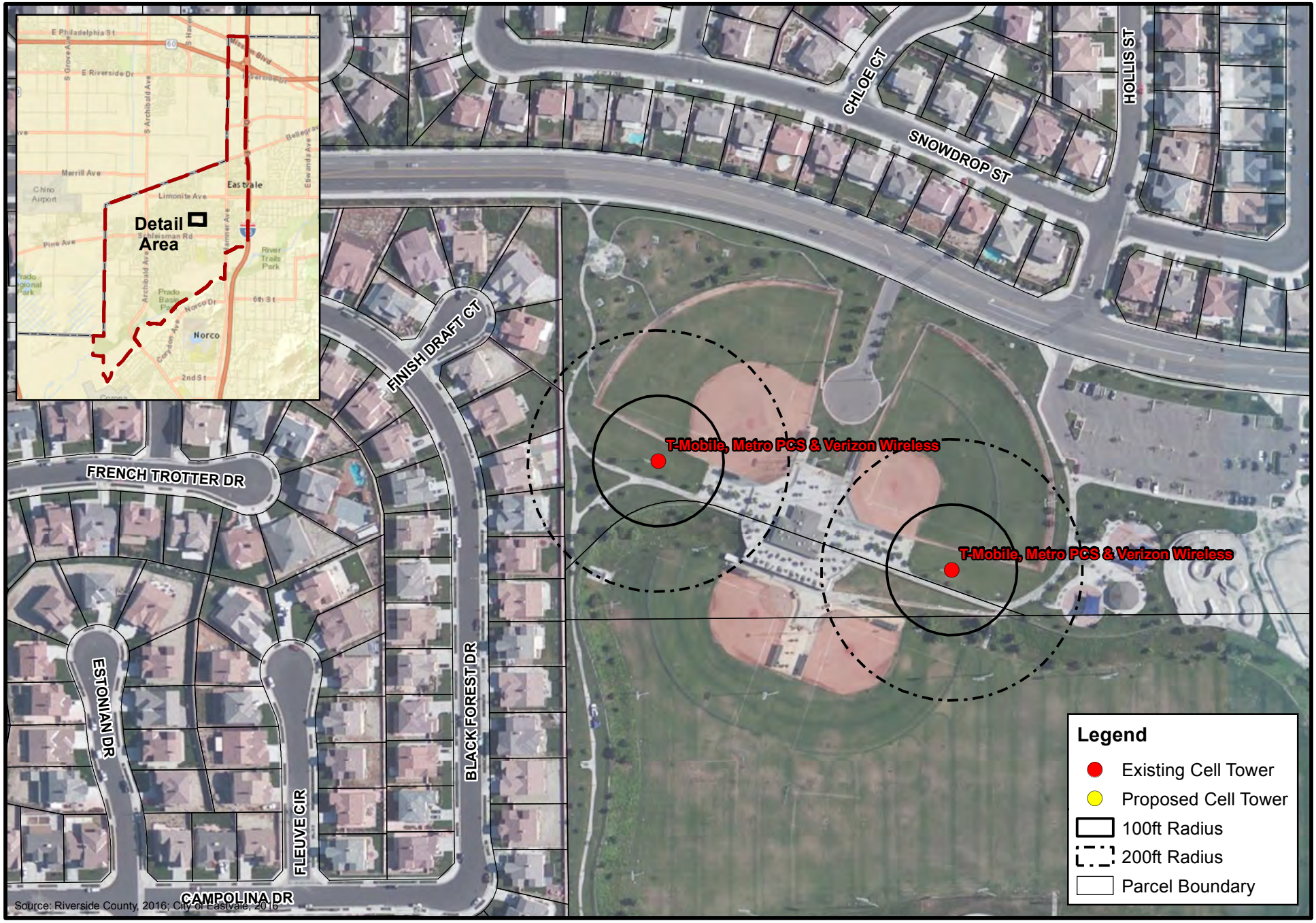

Source: Riverside County, 2016; City of Eastvale, 2016

N

100 50 0 100

Feet

Figure 8

100ft and 200ft Radius from Cell Tower

T:_GIS\Riverside_County\MXDs\Eastvale\Cell Tower Citywide\radius_8.mxd (6/6/2016)

N

100 50 0 100

Feet

Figure 9

100ft and 200ft Radius from Cell Tower

T:_GIS\Riverside_County\MXDs\Eastvale\Cell Tower Citywide\radius_9.mxd (6/6/2016)

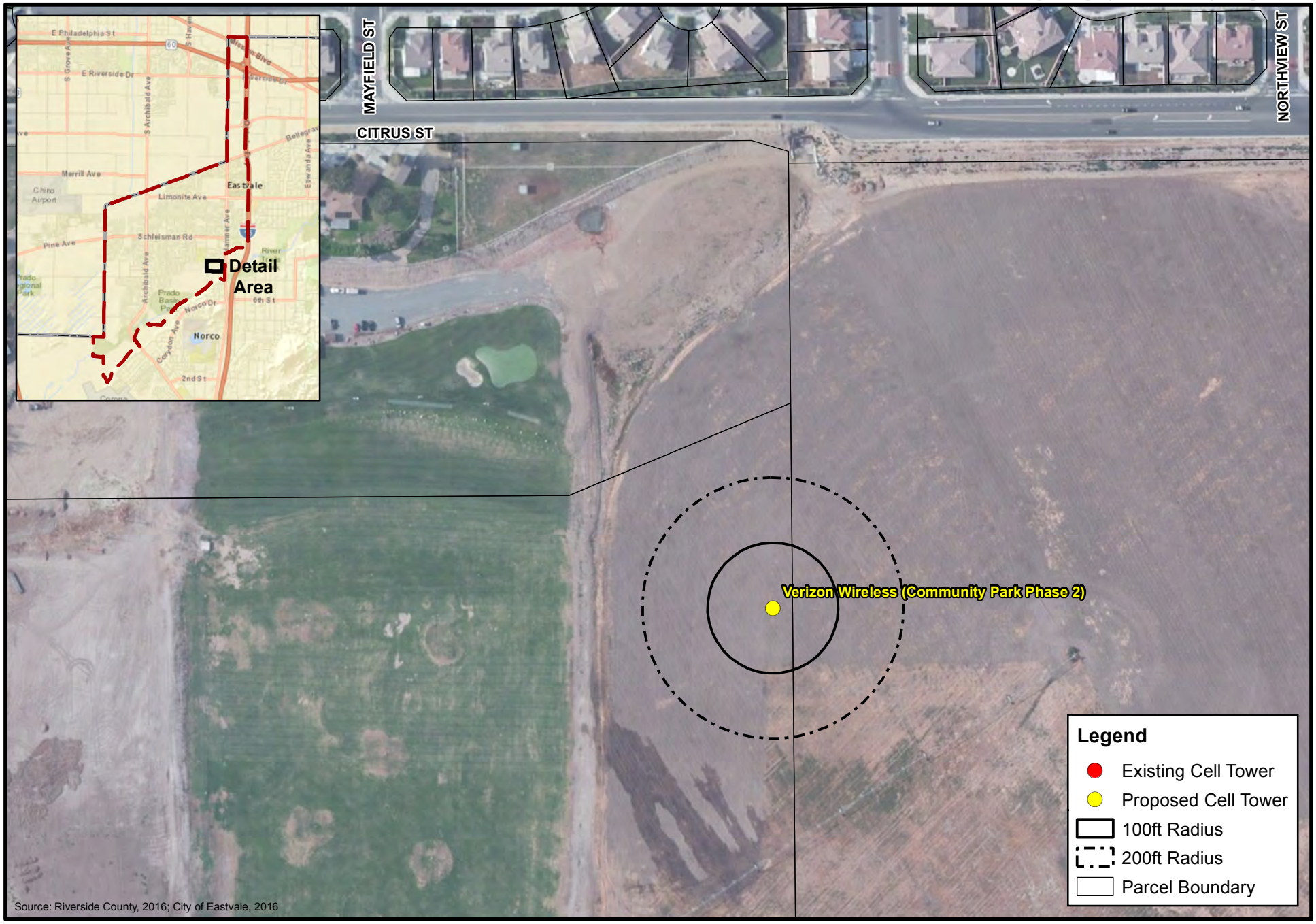

N

100 50 0 100

Feet

Figure 10

100ft and 200ft Radius from Cell Tower

T:_GIS\Riverside_County\MXDs\Eastvale\Cell Tower Citywide\radius_10.mxd (6/3/2016)

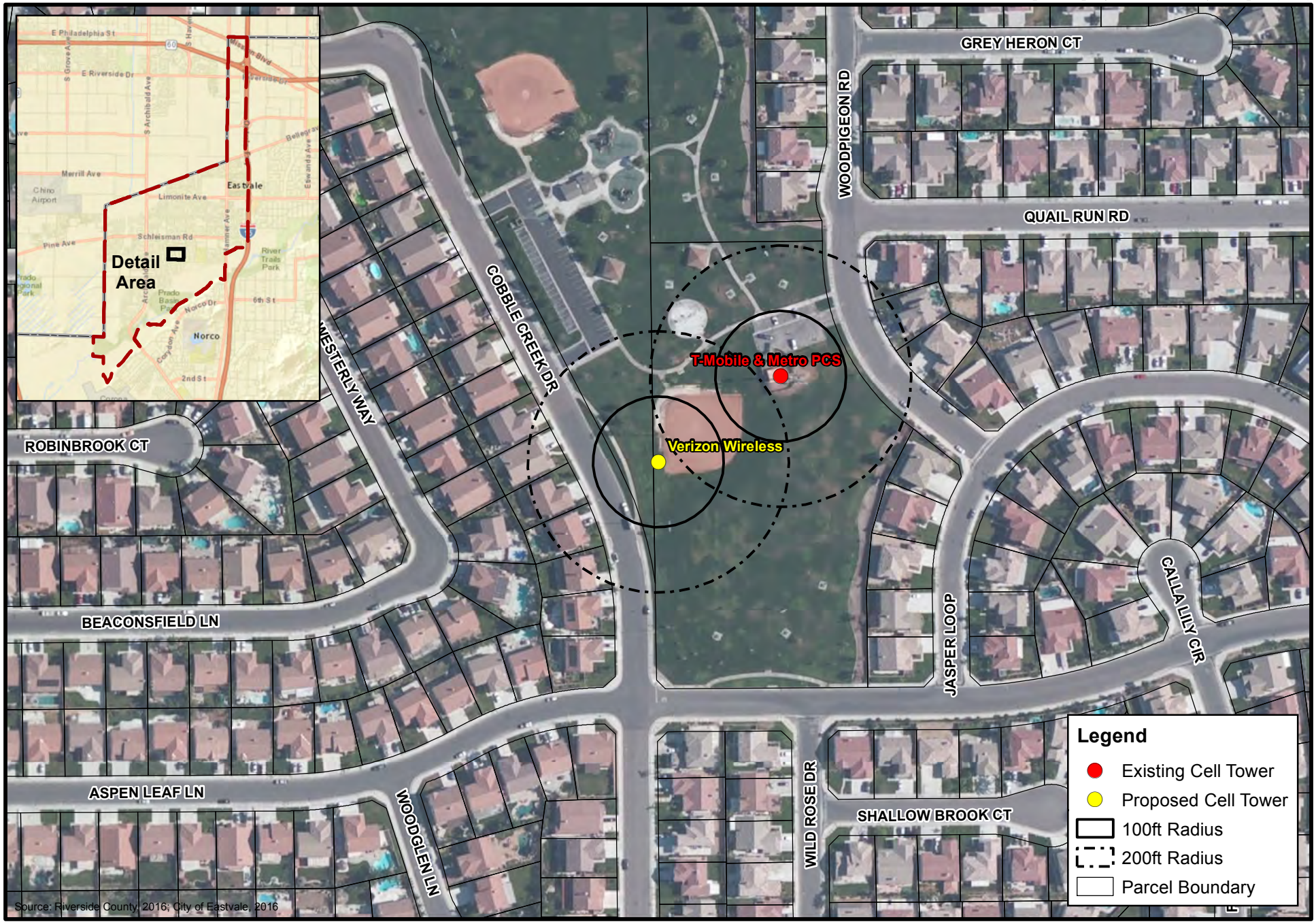

N

100 50 0 100

Feet

Figure 11

100ft and 200ft Radius from Cell Tower

T:_GIS\Riverside_County\MXDs\Eastvale\Cell Tower Citywide\radius_11.mxd (6/3/2016)

N

100 50 0 100

Feet

Figure 12

100ft and 200ft Radius from Cell Tower

T:_GIS\Riverside_County\MXDs\Eastvale\Cell Tower Citywide\radius_12.mxd (6/3/2016)

N

100 50 0 100

Feet

Figure 13

100ft and 200ft Radius from Cell Tower

T:_GIS\Riverside_County\MXDs\Eastvale\Cell Tower Citywide\radius_13.mxd (6/3/2016)

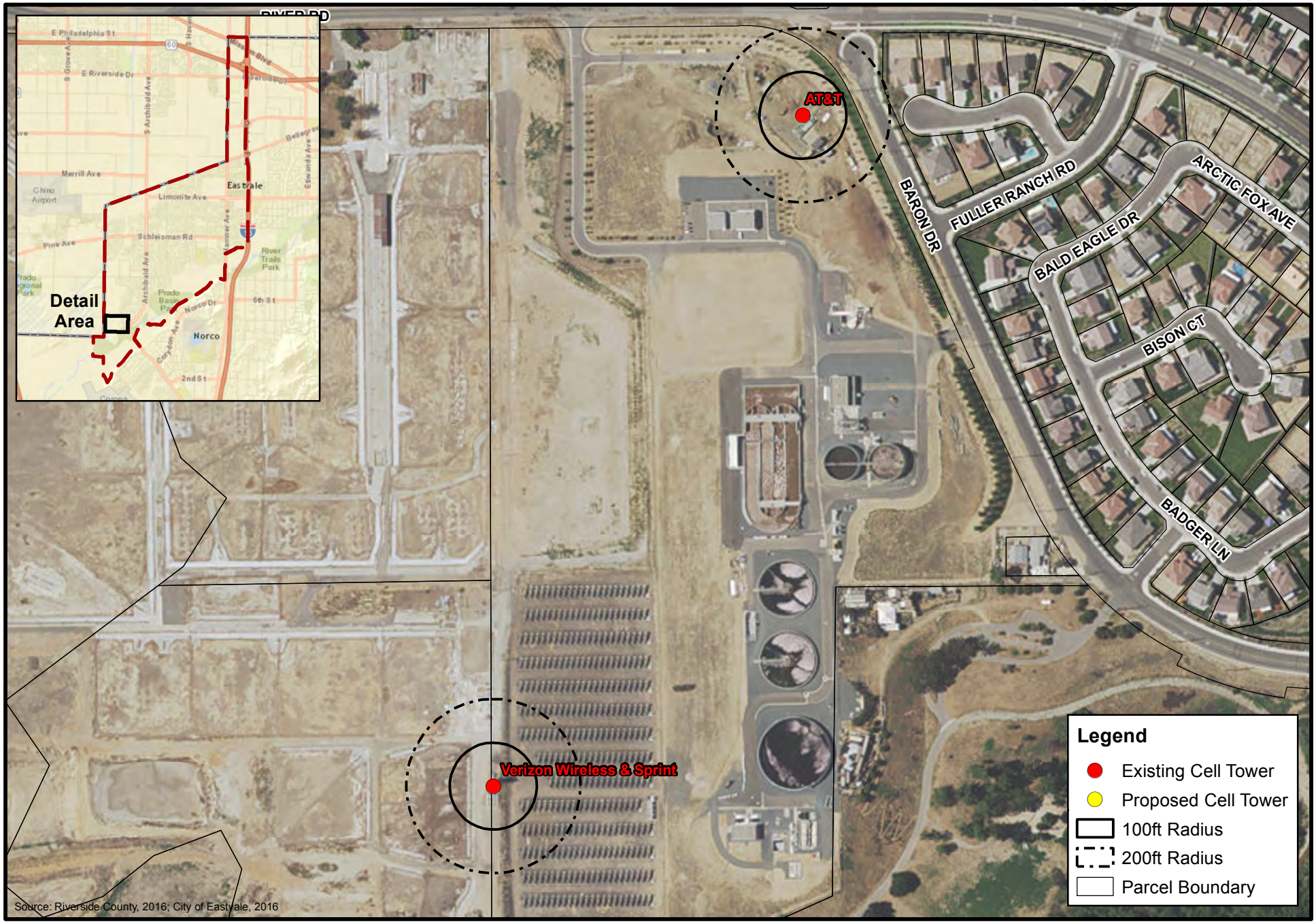

Source: Riverside County, 2016; City of Eastvale, 2016

N

100 50 0 100

Feet

Figure 14

100ft and 200ft Radius from Cell Tower

T:_GIS\Riverside_County\MXDs\Eastvale\Cell Tower Citywide\radius_14.mxd (6/3/2016)

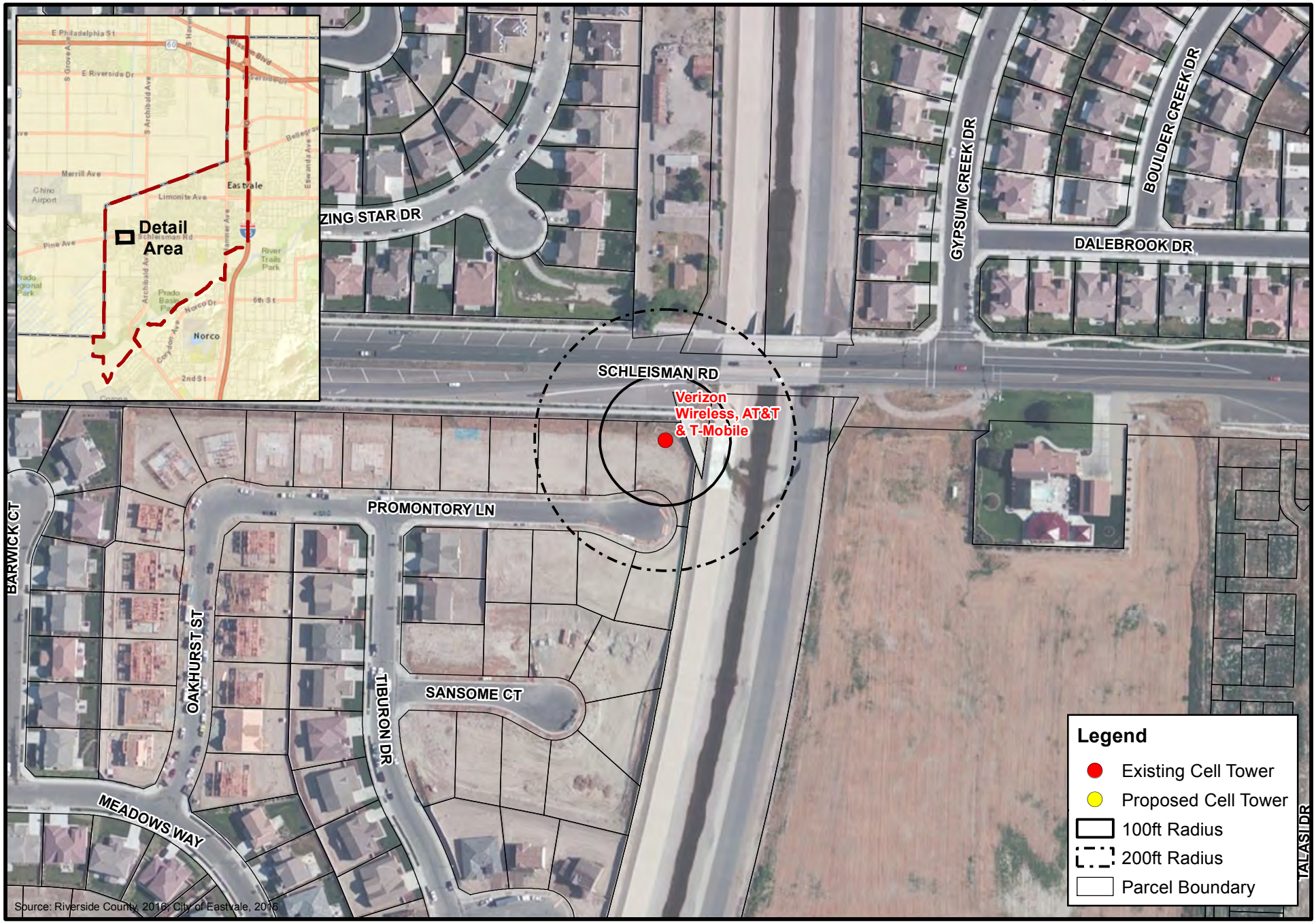

N

100 50 0 100

Feet

Figure 15

100ft and 200ft Radius from Cell Tower

ATTACHMENT 3

REVISED SITE PLAN

GRAPEWIN

8306 GRAPEWIN STREET
EASTVALE, CA 92880
RIVERSIDE COUNTY

verizon wireless

STEALTH ANTENNA STRUCTURE

CODES

ALL WORK AND MATERIALS SHALL BE PERFORMED AND INSTALLED IN ACCORDANCE WITH THE FOLLOWING CODES AS ADOPTED BY THE LOCAL GOVERNING AUTHORITIES. NOTHING IN THESE PLANS IS TO BE CONSTRUED TO PERMIT WORK NOT CONFORMING TO THE FOLLOWING CODES.

- 2013 CALIFORNIA BUILDING CODE, TITLE 24 PART 2
- 2013 CALIFORNIA ADMINISTRATIVE CODE, TITLE 24 PART 1
- 2013 CALIFORNIA ELECTRICAL CODE, TITLE 24 PART 3
- 2013 CALIFORNIA MECHANICAL CODE, TITLE 24 PART 4
- 2013 CALIFORNIA PLUMBING CODE, TITLE 24 PART 5
- 2013 CALIFORNIA ENERGY CODE, TITLE 24 PART 6
- 2013 CALIFORNIA FIRE CODE, TITLE 24 PART 9
- ANSI/TIA-222-G
- 2013 NFPA 72, NATIONAL FIRE ALARM CODE
- 2013 NFPA 13, SPRINKLER CODE
- CITY/ COUNTY ORDINANCES

PROJECT DESCRIPTION

CONSTRUCTION OF AN UNMANNED WIRELESS CELL SITE FOR VERIZON WIRELESS. PROJECT CONSISTS OF:

- (1) PROPOSED 50'-0" HIGH STEALTH ANTENNA STRUCTURE
- PROPOSED 17'-0"X 19'-0" VERIZON WIRELESS LEASE AREA/ TEXTURE SPLIT-FACE BLOCK WALL COMPOUND (323 sq.ft.)
- (2) PROPOSED MCE EQUIPMENT CABINETS ON PROPOSED CONCRETE PAD
- (12) PROPOSED PANEL ANTENNAS ON PROPOSED SECTOR FRAMES
- (12) PROPOSED RRU's ON PROPOSED SECTOR FRAMES
- (2) PROPOSED RAYCAP BOXES ON PROPOSED SECTOR FRAMES
- (1) PROPOSED 4' MICROWAVE DISH ON PROPOSED TOWER
- (2) PROPOSED GPS ANTENNAS MOUNTED ON CABINETS
- (1) PROPOSED STANDBY GENERATOR
- PROPOSED 2'x3' PULL BOX FOR POWER (EVERY 300')
- PROPOSED 17"x30" PULL BOX FOR FIBER (EVERY 300')
- PROPOSED 200AMP VERIZON WIRELESS POWER SERVICE
- DC & FIBER CABLES ROUTED ON INSIDE OF TOWER
- CONNECTION AS REQUIRED FOR POWER AND FIBER SERVICES

SITE INFORMATION

PROPERTY OWNER:	GERALD J. OSTERCAMP, KAREN L. OSTERCAMP, JOSEPH S. OSTERCAMP CONTACT NAME: JOE OSTERCAMP CONTACT NUMBER: (951) 737-2319
TOWER OWNER:	VERIZON WIRELESS 15505 SAND CANYON AVE. BLDG. 'D' 1st FL. IRVINE, CA 92618
SITE CONTACT:	VERIZON WIRELESS 15505 SAND CANYON AVE. BLDG. 'D' 1st FL. IRVINE, CA 92618 CONTACT: PROPERTY MANAGEMENT CONTACT NUMBER: (949) 286-7000
COUNTY:	RIVERSIDE COUNTY
ZONING JURISDICTION:	CITY OF EASTVALE
ZONING DISTRICT:	LIGHT AGRICULTURAL (A1)
PARCEL #:	130-070-018
OCCUPANCY GROUP:	U (UTILITY)
CONSTRUCTION TYPE:	2-B
POWER COMPANY:	SOUTHERN CALIFORNIA EDISON CONTACT NUMBER: (800) 990-7788
FIBER COMPANY:	T.B.D. CONTACT NUMBER: T.B.D.
SITE ACQUISITION MANAGER:	SAC WIRELESS 5865 AVENIDA ENCINAS, STE. 142B CARLSBAD, CA 92008 CONTACT NAME: JENNIFER CHESNEY CONTACT NUMBER: (949) 235-6262
SITE ACQUISITION CONTACT:	SAC WIRELESS 5865 AVENIDA ENCINAS, STE. 142B CARLSBAD, CA 92008 CONTACT NAME: JENNIFER CHESNEY CONTACT NUMBER: (949) 235-6262
ENGINEERING COMPANY:	W-T COMMUNICATIONS DESIGN GROUP, LLC 8560 S. EASTERN AVE. LAS VEGAS, NV 89123 COMPANY NUMBER: (702) 998-1000
SURVEYOR:	DIAMONDBACK LAND SURVEYING LLC. CONTACT NUMBER: (702) 823-3257

CONTACT INFORMATION

SITE CONTACT:	SAC WIRELESS 5865 AVENIDA ENCINAS, STE. 142B CARLSBAD, CA 92008
ZONING CONTACT:	DAIL RICHARD (858) 200-6541
LEASING CONTACT:	BRIANNA NOLER (760) 900-6034

LEGAL DESCRIPTION

THE LAND REFERRED TO HEREIN BELOW IS SITUATED IN THE COUNTY OF RIVERSIDE, STATE OF CALIFORNIA, AND IS DESCRIBED AS FOLLOWS: PARCEL 1 OF PARCEL MAP 33534, IN THE COUNTY OF RIVERSIDE, STATE OF CALIFORNIA, AS SHOWN BY PARCEL MAP ON FILE IN BOOK 220, PAGES 74 AND 75, RECORDS OF SAID RIVERSIDE COUNTY.
APN: 130-070-018

OVERALL HEIGHT
50'-0"

11"x17" PLOT WILL BE HALF SCALE UNLESS OTHERWISE NOTED

CONTRACTOR SHALL VERIFY ALL PLANS & EXISTING DIMENSIONS & CONDITIONS ON THE JOB SITE & SHALL IMMEDIATELY NOTIFY THE ENGINEER IN WRITING OF ANY DISCREPANCIES BEFORE PROCEEDING WITH THE WORK OR BE RESPONSIBLE FOR SAME

VICINITY MAP

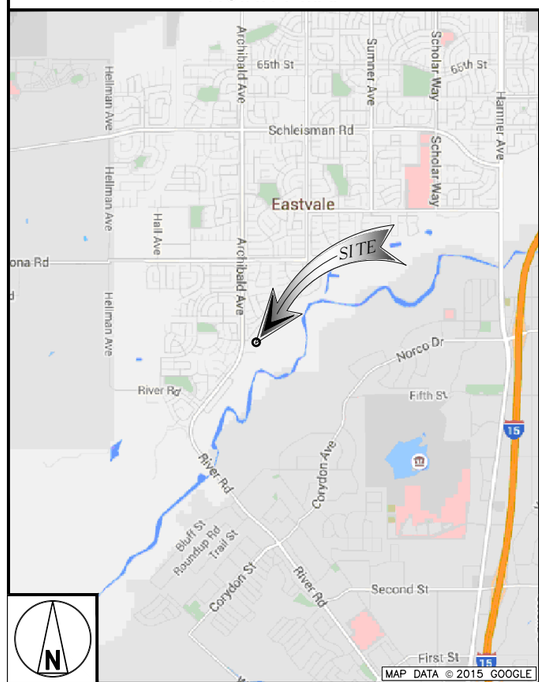

LOCAL MAP

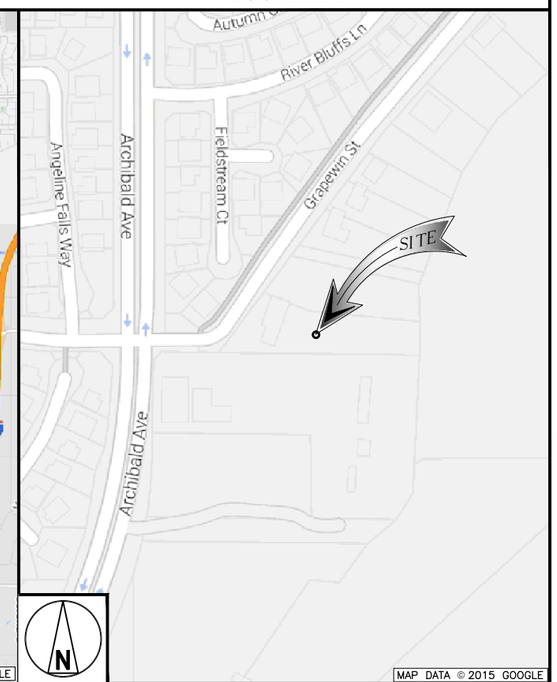

NO SCALE

DRIVING DIRECTIONS FROM VZW IRVINE OFFICE

DEPART: 15505 SAND CANYON AVE, IRVINE, CA 92618.

HEAD SOUTHEAST TOWARD SAND CANYON SIDE PATH/SAND CANYON TRAIL. TURN RIGHT ONTO SAND CANYON AVE. TURN LEFT AT THE 1ST CROSS STREET ONTO BARRANCA PKWY. TURN RIGHT ONTO PACIFICA. TURN RIGHT ONTO THE STATE HIGHWAY 133 N RAMP THEN MERGE ONTO CA-133 N. KEEP RIGHT AT THE FORK TO STAY ON CA-133 N. MERGE ONTO CA-241 N. TAKE THE EXIT ONTO CA-91 E TOWARD RIVERSIDE. TAKE THE LINCOLN AVENUE EXIT. TURN RIGHT ONTO S LINCOLN AVE. TURN LEFT ONTO RIVER RD THEN CONTINUE ONTO ARCHIBALD AVE. TURN RIGHT ONTO GRAPEWIN ST. DESTINATION WILL BE ON THE RIGHT.

ARRIVE AT: 8306 GRAPEWIN STREET EASTVALE, CA 92880.

STRUCTURAL NOTE

NOTE:
W-T'S SCOPE OF WORK DOES NOT INCLUDE A STRUCTURAL EVALUATION OF THIS TOWER OR STRUCTURE. NEW ANTENNAS SHOWN ON THIS PLAN HAVE NOT BEEN EVALUATED TO VERIFY THE TOWER OR STRUCTURE HAS THE CAPACITY TO ADEQUATELY SUPPORT THESE ANTENNAS. PRIOR TO ANY ANTENNA INSTALLATION, A STRUCTURAL EVALUATION OF THE TOWER OR STRUCTURE, INCLUDING ALL ANTENNA MOUNTING SYSTEMS AND HARDWARE, SHOULD BE PERFORMED.

GENERAL NOTES

THE FACILITY IS UNMANNED AND NOT FOR HUMAN HABITATION. A TECHNICIAN WILL VISIT THE SITE AS REQUIRED FOR ROUTINE MAINTENANCE. THE PROJECT WILL NOT RESULT IN ANY SIGNIFICANT DISTURBANCE OR EFFECT ON DRAINAGE; NO SANITARY SEWER SERVICE, POTABLE WATER, OR TRASH DISPOSAL IS REQUIRED AND NO COMMERCIAL SIGNAGE IS PROPOSED.

APPROVALS

THE FOLLOWING PARTIES HEREBY APPROVE AND ACCEPT THESE DOCUMENTS & AUTHORIZE THE SUBCONTRACTOR TO PROCEED WITH CONSTRUCTION DESCRIBED HEREIN. ALL DOCUMENTS ARE SUBJECT TO REVIEW BY THE LOCAL BUILDING DEPARTMENT & MAY IMPOSE CHANGES OR MODIFICATIONS.

DISCIPLINE:	SIGNATURE:	DATE:
LANDLORD:		
PROJECT MANAGER:		
CONSTRUCTION MANAGER:		
RF ENGINEER:		
SITE ACQUISITION:		
ZONING MANAGER:		
UTILITY COORDINATOR:		
NETWORK OPERATIONS:		

DRAWING INDEX

SHEET NO	SHEET TITLE
T-1	TITLE SHEET & PROJECT DATA
LS-1	LAND SURVEY
A-1	OVERALL SITE PLAN
A-2	ENLARGED SITE & ANTENNA PLAN
A-3	LANDSCAPING
A-4	ELEVATIONS
A-5	ELEVATIONS

811
NOTE:
48 HOURS PRIOR TO DIGGING, CONTRACTOR TO NOTIFY ALL UTILITY COMPANIES TO LOCATE ALL UNDERGROUND UTILITIES.

Know what's **below.**
Call before you dig.

W-T Communication Design Group's Commitment to Quality

Please take a few moments to fill out our online survey.

verizon wireless
15505 SAND CANYON AVE.
BUILDING 'D' 1st FL.
IRVINE, CA 92618

W-T
W-T COMMUNICATION DESIGN GROUP, LLC.
WIRELESS INFRASTRUCTURE
8650 S. Eastern Ave. Suite 220
Las Vegas, NV 89123
PH: (702) 998-1000 FAX: (702) 998-1010
www.wtengineering.com

COPYRIGHT © 2015 W-T COMMUNICATION DESIGN GROUP, LLC.

SAC WIRELESS
5865 AVENIDA ENCINAS, STE. 142B
CARLSBAD, CA 92008

PROJECT NO:	T143451
DRAWN BY:	RD
CHECKED BY:	MMR

REV	DATE	DESCRIPTION
E	06/03/16	PER COMMENTS
D	08/24/15	CITY COMMENTS
C	08/21/15	LEGAL DISCRIPTION REVISION
B	07/07/15	100% ZONING DRAWINGS
A	06/09/15	90% ZONING DRAWINGS

NOT TO BE USED FOR CONSTRUCTION

IT IS A VIOLATION OF LAW FOR ANY PERSON, UNLESS THEY ARE ACTING UNDER THE DIRECTION OF A LICENSED PROFESSIONAL ENGINEER, TO ALTER THIS DOCUMENT.

GRAPEWIN
8306 GRAPEWIN STREET
EASTVALE, CA 92880
RIVERSIDE COUNTY

SHEET TITLE
TITLE SHEET & PROJECT DATA

SHEET NUMBER
T-1

5 EASEMENT(S) IN FAVOR OF THE PUBLIC OVER ANY EXISTING ROADS LYING WITHIN SAID LAND.
(AFFECTS PARCEL – NOT DEFINED – NOT PLOTTABLE)

6 MUTUAL RIGHTS OF WAY RESERVED TO THE STEARNS RANCHO COMPANY AND JURUPA LAND AND WATER COMPANY, THEIR SUCCESSORS OR ASSIGNS, FOR DITCHES, CANALS OR PIPE LINES THAT MAY BE DEEMED NECESSARY OR PROPERTY BY SAID PARTIES FOR THE PROPERTY IRRIGATION OF ANY OTHER LANDS IN THE JURUPA RANCHO, OR FOR THE SUPPLYING OF THE MAIN CANALS WITH WATER, PROVIDED, HOWEVER, THAT SUCH DITCHES SHALL PRACTICABLE FOLLOW THE LINE OF THE SURVEYED SUBDIVISION OF THE JURUPA RANCHO, RECORDED IN BOOK 16 PAGES 94 THROUGH 97, OF MAPS.
(AFFECTS PARCEL – NOT DEFINED – NOT PLOTTABLE)

7 COVENANTS, CONDITIONS AND RESTRICTIONS BUT OMITTING ANY COVENANTS OR RESTRICTIONS, IF ANY, INCLUDING BUT NOT LIMITED TO THOSE BASED UPON RACE, COLOR, RELIGION, SEX, SEXUAL ORIENTATION, FAMILIAL STATUS, MARITAL STATUS, DISABILITY, HANDICAP, NATIONAL ORIGIN, ANCESTRY, SOURCE OF INCOME, GENDER, GENDER IDENTITY, GENDER EXPRESSION, MEDICAL CONDITION OR GENETIC INFORMATION, AS SET FORTH IN APPLICABLE STATE OR FEDERAL LAWS, EXCEPT TO THE EXTENT THAT SAID COVENANT OR RESTRICTION IS PERMITTED BY APPLICABLE LAW, AS SET FORTH IN THE DOCUMENT

RECORDING DATE: JUNE 3, 1939
RECORDING NO: BOOK 415 PAGE 581, OF OFFICIAL RECORDS

AND RECORDING DATE: JUNE 20, 1939
AND RECORDING NO: BOOK 420 PAGE 342, OF OFFICIAL RECORDS

SAID COVENANTS, CONDITIONS AND RESTRICTIONS PROVIDE THAT A VIOLATION THEREOF SHALL NOT DEFEAT THE LIEN OF ANY MORTGAGE OR DEED OF TRUST MADE IN GOOD FAITH AND FOR VALUE.
(AFFECTS PARCEL – BLANKET IN NATURE – NOT PLOTTABLE)

8 EASEMENT(S) IN FAVOR OF THE PUBLIC OVER ANY EXISTING ROADS LYING WITHIN SAID LAND.
(AFFECTS PARCEL –
COVENANTS, CONDITIONS AND RESTRICTIONS BUT OMITTING ANY COVENANTS OR RESTRICTIONS, IF ANY, INCLUDING BUT NOT LIMITED TO THOSE BASED UPON RACE, COLOR, RELIGION, SEX, SEXUAL ORIENTATION, FAMILIAL STATUS, MARITAL STATUS, DISABILITY, HANDICAP, NATIONAL ORIGIN, ANCESTRY, SOURCE OF INCOME, GENDER, GENDER IDENTITY, GENDER EXPRESSION, MEDICAL CONDITION OR GENETIC INFORMATION, AS SET FORTH IN APPLICABLE STATE OR FEDERAL LAWS, EXCEPT TO THE EXTENT THAT SAID COVENANT OR RESTRICTION IS PERMITTED BY APPLICABLE LAW, AS SET FORTH IN THE DOCUMENT

RECORDING DATE: JANUARY 10, 1969
RECORDING NO: 57429, OF OFFICIAL RECORDS

SAID COVENANTS, CONDITIONS AND RESTRICTIONS PROVIDE THAT A VIOLATION THEREOF SHALL NOT DEFEAT THE LIEN OF ANY MORTGAGE OR DEED OF TRUST MADE IN GOOD FAITH AND FOR VALUE.
(AFFECTS PARCEL – BLANKET IN NATURE – NOT PLOTTABLE)

9 DISCREPANCIES, CONFLICTS IN BOUNDARY LINES, SHORTAGE IN AREA, ENCROACHMENTS, OR ANY OTHER MATTERS SHOWN ON

MAP: BOOK 93 PAGES 83 THROUGH 93
RECORDING NO: RECORDS OF SURVEY
(AFFECTS PARCEL – PLOTTED)

10 EASEMENT(S) FOR THE PURPOSE(S) SHOWN BELOW AND RIGHTS INCIDENTAL THERETO, AS GRANTED IN A DOCUMENT: GRANTED TO: STANDARD PACIFIC CORP., A DELAWARE CORPORATION
PURPOSE: A PERPETUAL EXCLUSIVE EASEMENT IN GROSS AND RIGHT OF WAY
RECORDING DATE: DECEMBER 11, 2003
RECORDING NO: 2003–970461, OF OFFICIAL RECORDS
AFFECTS: SAID LAND MORE PARTICULARLY DESCRIBED THEREIN

AND THEREAFTER THE INTEREST IN SAID EASEMENT WAS ASSIGNED TO THE RIVERSIDE FLOOD CONTROL AND WATER CONSERVATION DISTRICT BY ASSIGNMENT OF EASEMENT RECORDED JULY 3, 2007 AS INSTRUMENT NO. 2007–435198, OF OFFICIAL RECORDS.
(AFFECTS PARCEL – PLOTTED)

11 VARIOUS MATTERS INCLUDING, BUT NOT LIMITED TO, REQUIREMENTS FOR DEVELOPING OR IMPROVING THE LAND, PROPOSED EASEMENTS, COVENANTS, CONDITIONS, RESTRICTIONS AND PROVISIONS SET FORTH ON PARCEL MAP NO. 33534.
(AFFECTS PARCEL – PLOTTED)

LEGAL DESCRIPTIONS: BASED UPON THE PRELIMINARY TITLE REPORT FROM TICOR TITLE COMPANY, ORDER NO. 00325478–990–GG4 WITH AN EFFECTIVE DATE OF MAY 19, 2015 AT 7:30 A.M.

THE LAND REFERRED TO HEREIN BELOW IS SITUATED IN THE COUNTY OF RIVERSIDE, STATE OF CALIFORNIA, AND IS DESCRIBED AS FOLLOWS:

PARCEL 1 OF PARCEL MAP 33534, IN THE COUNTY OF RIVERSIDE, STATE OF CALIFORNIA, AS SHOWN BY PARCEL MAP ON FILE IN BOOK 220, PAGES 74 AND 75, RECORDS OF SAID RIVERSIDE COUNTY.

APN: 130–070–018

LEGAL DESCRIPTIONS: BASED UPON THE PRELIMINARY TITLE REPORT FROM TICOR TITLE COMPANY, ORDER NO. 00345276–990–GG4 WITH AN EFFECTIVE DATE OF AUGUST 13, 2015 AT 7:30 A.M.

THE LAND REFERRED TO HEREIN BELOW IS SITUATED IN THE COUNTY OF RIVERSIDE, STATE OF CALIFORNIA, AND IS DESCRIBED AS FOLLOWS:

PARCEL 2 OF PARCEL MAP 33534, IN THE CITY OF EASTVALE, COUNTY OF RIVERSIDE, STATE OF CALIFORNIA, AS PER MAP RECORDED IN BOOK 220 PAGES 74 AND 75, OF PARCEL MAPS, IN THE OFFICE OF THE COUNTY RECORDER OF SAID COUNTY.

APN 130–070–019

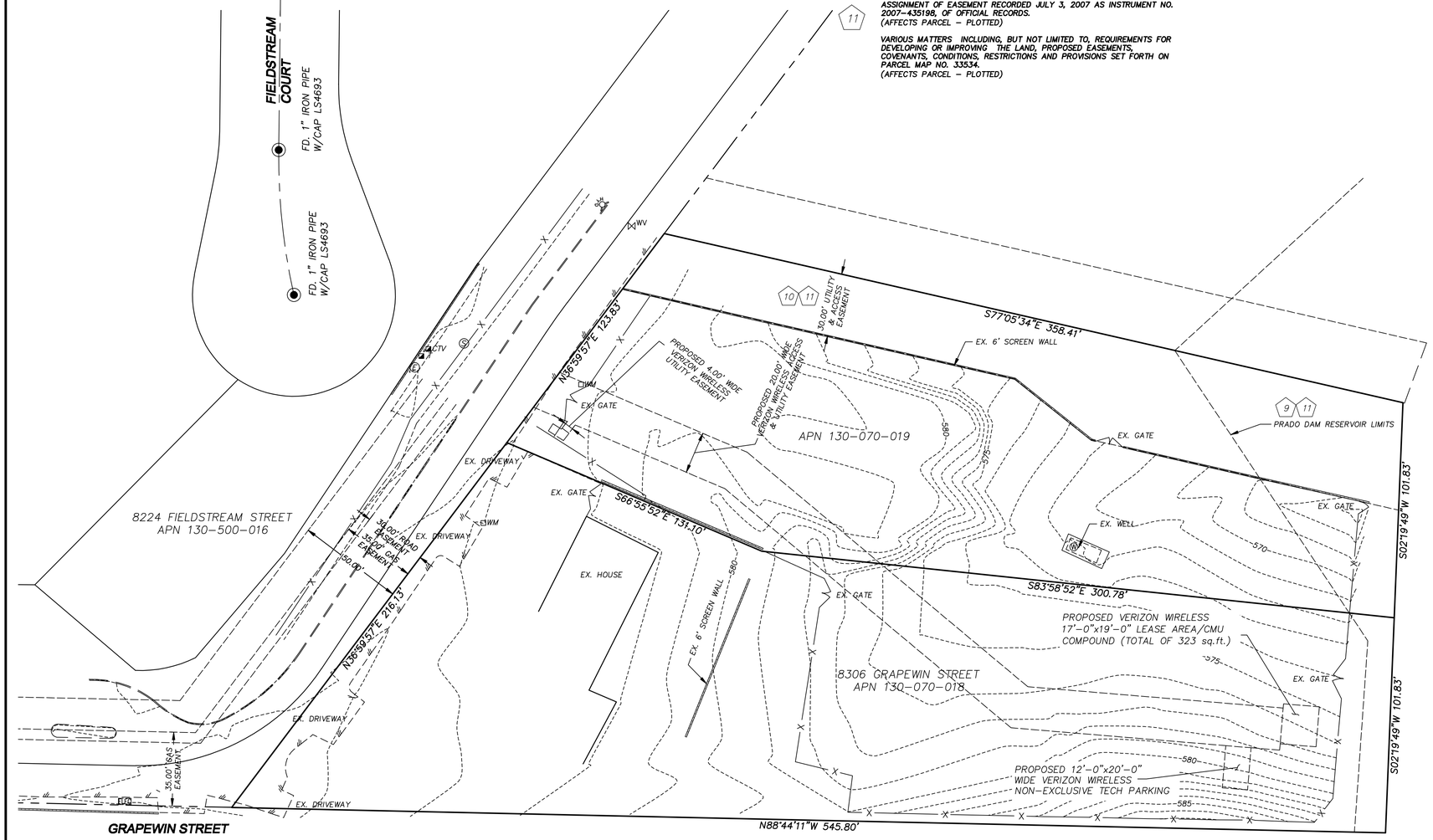

Diamondback Land Surveying
5506 S. FORT APACHE ROAD, SUITE 110
LAS VEGAS, NEVADA 89148
(o) 702.823.DBLS (f) 702.933.9030
www.diamondbacklandsurveying.com
PLOTTED 9-3-2015

SITE NAME/ NUMBER: WT GRAPEWIN
SITE ADDRESS: 8306 GRAPEWIN STREET CORONA, CA. 92880

OWNER'S NAME/ ADDRESS: KAREN OSTERKAMP, TRUSTEE OF THE KAREN OSTERKAMP TRUST ESTABLISHED OCTOBER 26, 2010

PRESENT USE: RESIDENTIAL

ASSESSOR PARCEL NO.(S): 130–070–018 AND –019

NET AREA OF PARCEL(S): 2.55± ACRES

BASIS OF BEARINGS:

NORTH 00°37'37" EAST, BEING THE CENTERLINE OF FIELDSTREAM COURT AS SHOWN BY TRACT NO. 30735 IN BOOK 366 OF TRACT MAPS, PAGE 42–57, OFFICIAL RECORDS RIVERSIDE COUNTY, CA. SITUATED IN SECTION 2, TOWNSHIP 3 SOUTH, RANGE 7 WEST, S.B.B. & M.

BENCHMARK:

NATIONAL GEODETIC SURVEY DESIGNATION; 601 40 69, PID; DX2869 BEING A SURVEY DISK SET IN TOP OF CONCRETE MONUMENT STAMPED 601–40–69 AND DESCRIBED BY NATIONAL GEODETIC SURVEY 1988 AS BEING 2.5 KM (1.55MI) WEST ALONG THE ATCHISON TOPEKA AND SANTA FE RAILROAD FROM THE MAIN STREET CROSSING IN CORONA, AT THE NORTHWEST CORNER OF A CHAIN LINK FENCE, 102 M (334.6 FT) EAST OF THE CENTERLINE OF SMITH ROAD, 16.4 M (53.8 FT) SOUTH OF THE SOUTH RAIL, 2.1 M (6.9 FT) SOUTHEAST OF A POWER POLE NUMBERED 1571163–E, 1.2 M (3.9 FT) NORTHEAST OF THE FENCE CORNER.
THE MARK IS 0.6 METERS E FROM A WITNESS POST
THE MARK IS 0.9 M ABOVE THE RAILROAD.

ELEVATION: 608.40 FEET (NAVD 1988)
185.44 METERS (NAVD 1988)

NOTE: A FIELD SURVEY WAS PERFORMED ON MAY 8, 2015.

FLOOD NOTE: AS SCALED FROM FLOOD INSURANCE RATE MAP NO. 06065C0687G AND 06065C0679, DATED AUGUST 28, 2008 AND PER SAID MAP: LOCATED IN UNSHADED ZONE X, AREA DETERMINED TO BE INSIDE THE 0.2% ANNUAL CHANCE FLOODPLAIN AND ZONE AE, AREA WITHIN THE 1% ANNUAL FLOOD (100–YEAR FLOOD)

PARCEL INFORMATION

	PROPERTY LINE
	FLOW LINE
TEL	TELEPHONE LINE
E	ELECTRIC LINE
E&T	ELECTRIC AND TELEPHONE LINES
×	FENCE
	FIRE HYDRANT
	GUY WIRE
	STREET SIGN
	STREET LIGHT
	WATER VALVE
FS	FINISH SURFACE
FL	FLOW LINE
FSR	FINISH SURFACE ROOF
TC	TOP OF CURB
BFC	BOTTOM FACE OF CURB
TW	TOP OF WALL
BW	BOTTOM OF WALL
TBW	TOP BACK OF WALK
G	GROUND WELL
D	ROOF DRAIN
	BOLLARD
V	VENT
	FOUND MONUMENT AS NOTED
7	EXCEPTION NUMBER PER TITLE REPORT

LEGEND

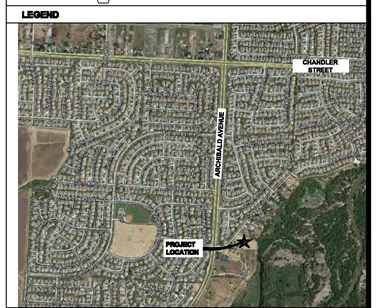

1 VICINITY MAP

verizon wireless
15505 SAND CANYON AVE.
BUILDING 'D' 1st FL.
IRVINE, CA 92618

W-T
W–T COMMUNICATION DESIGN GROUP, LLC.
WIRELESS INFRASTRUCTURE
2675 PRATUM AVENUE
Hoffman Estates, Illinois 60192
PH: (224) 293-6333 FAX: (224) 293-6444
www.wtengineering.com

COPYRIGHT © 2015 W-T COMMUNICATION DESIGN GROUP, LLC.

PROJECT NO:	150405
DRAWN BY:	RDC
CHECKED BY:	–

REV	DATE	DESCRIPTION

LICENSED PROFESSIONAL SURVEYOR
TRENT J. KEENAN
Exp. 3/31/2016
8396
STATE OF CALIFORNIA
9/29/15

IT IS A VIOLATION OF LAW FOR ANY PERSON, UNLESS THEY ARE ACTING UNDER THE DIRECTION OF A LICENSED PROFESSIONAL ENGINEER, TO ALTER THIS DOCUMENT.

GRAPEWIN

8306 GRAPEWIN STREET
CORONA, CA 92880

SHEET TITLE
SITE SURVEY

SHEET NUMBER
LS-1

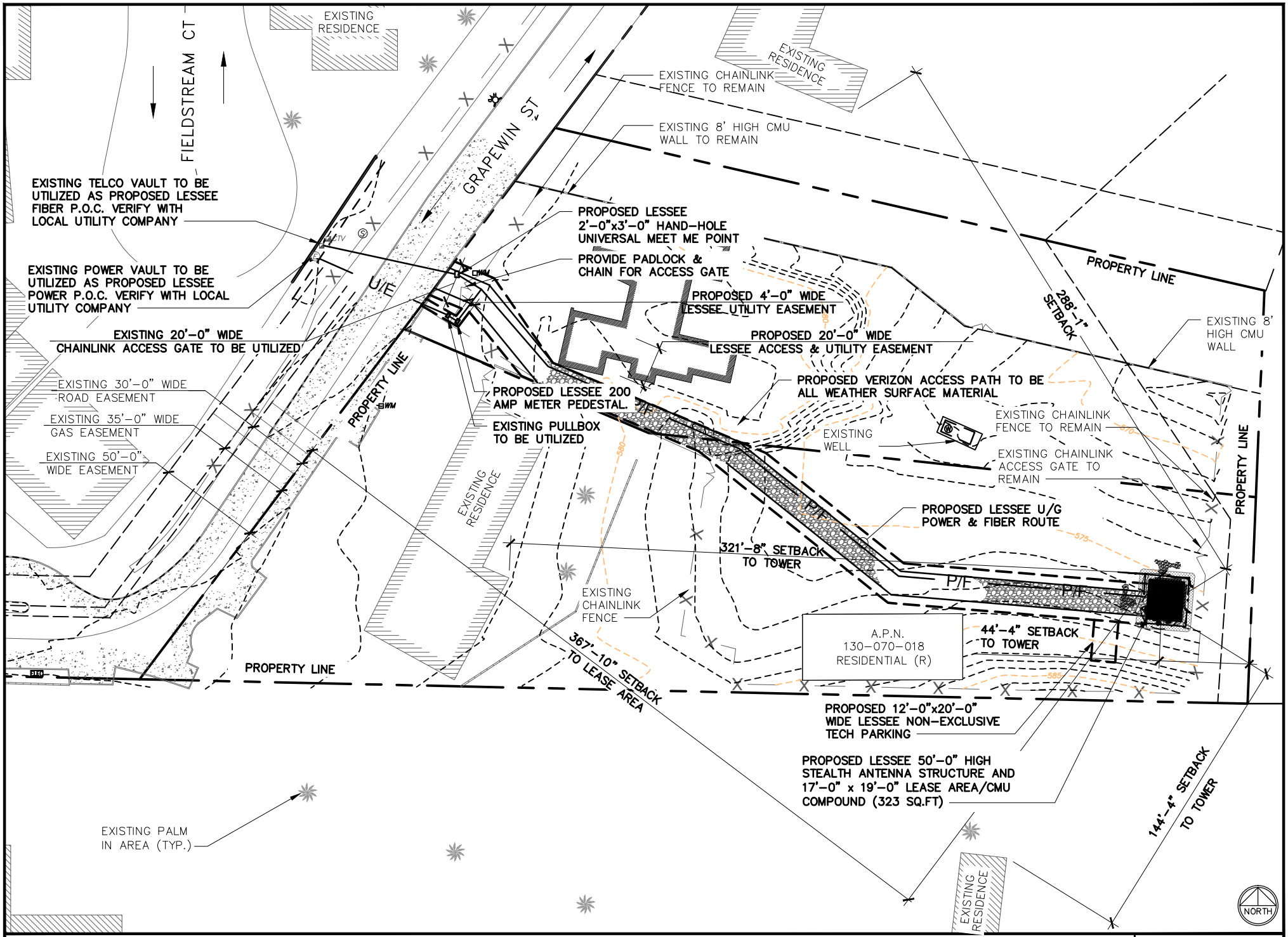

LEASE EXHIBIT--GRAPEWIN- 8306 GRAPEWIN STREET CORONA, CA 92880.

SCALE:

NO SCALE

NOTE:
REFERENCE SURVEY BY **DIAMONDBACK LAND SURVEYING, LLC. DATED 05/08/15**. SURVEY FOR ALL PROPERTY LINES AND EXISTING EASEMENT INFORMATION.

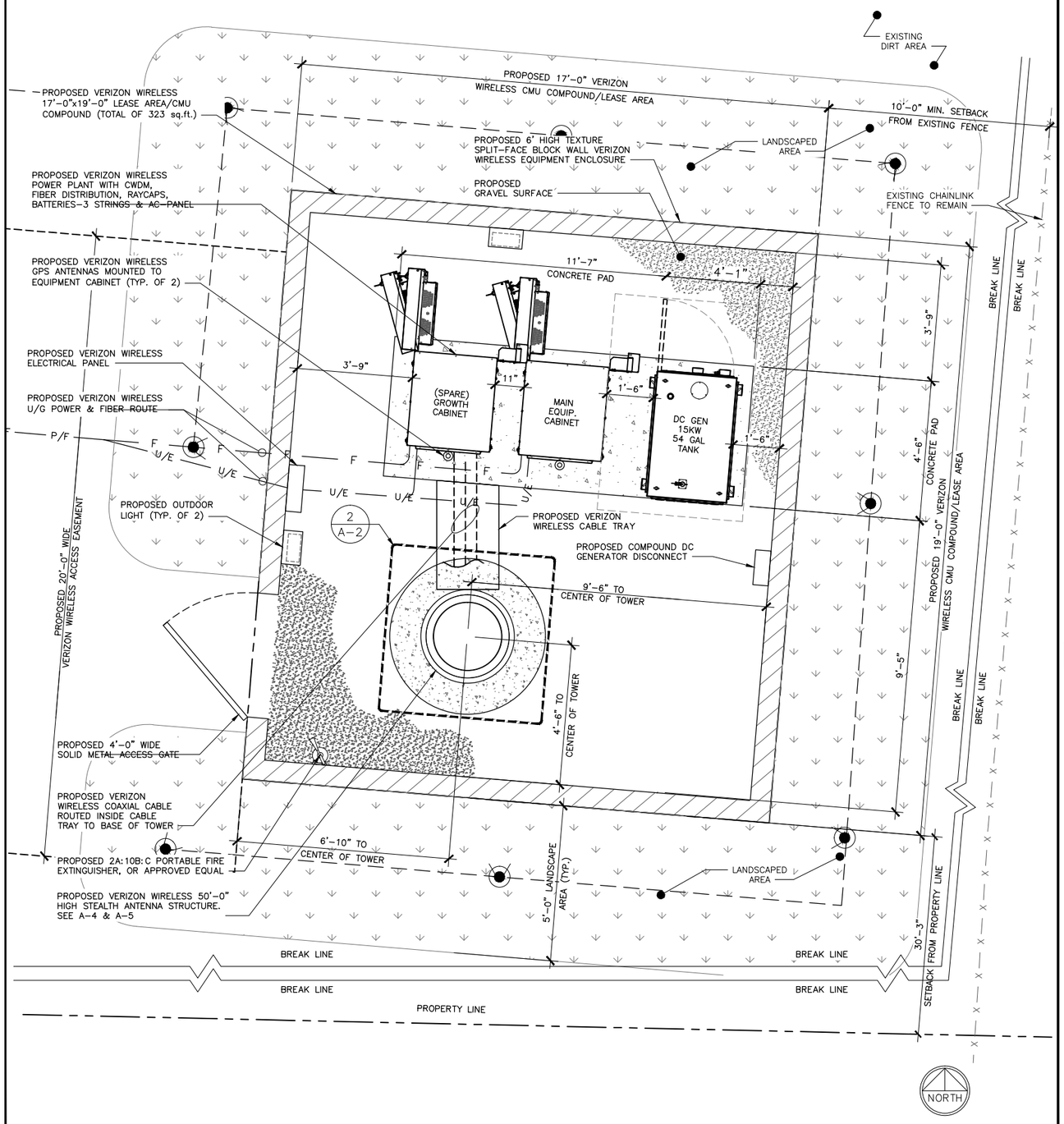

ENLARGED SITE PLAN | SCALE: 1/2" = 1'-0" | 1

NOTE:
ALL EQUIPMENT ON THE TOWER WILL BE INSTALLED PER THE JURISDICTION APPROVED DRAWINGS. ANY DEVIATION FROM THE DRAWINGS WILL REQUIRE A PLANNING APPROVAL STAMP. ALL EQUIPMENT MUST BE INSTALLED PER THE SLA (NOT TO EXCEED VERTICAL LEASE AREA).

NOTE:
W-T'S SCOPE OF WORK DOES NOT INCLUDE A STRUCTURAL EVALUATION OF THIS TOWER OR STRUCTURE. NEW ANTENNAS SHOWN ON THIS PLAN HAVE NOT BEEN EVALUATED TO VERIFY THE TOWER OR STRUCTURE HAS THE CAPACITY TO ADEQUATELY SUPPORT THESE ANTENNAS. PRIOR TO ANY ANTENNA INSTALLATION, A STRUCTURAL EVALUATION OF THE TOWER OR STRUCTURE, INCLUDING ALL ANTENNA MOUNTING SYSTEMS AND HARDWARE, SHOULD BE PERFORMED.

NOTE:
STEALTH ANTENNA STRUCTURE BRANCHES NOT SHOWN FOR CLARITY

NOTE:
ALL PROPOSED ANTENNAS AND EQUIPMENT MOUNTED TO PROPOSED ANTENNA STRUCTURE SHALL BE PAINTED TO MATCH THE PROPOSED STEALTH ANTENNA STRUCTURE BRANCHES. INSTALL PROPOSED COLLAR, T-ARMS & SECTOR FRAMES FOR PROPOSED TOWER EQUIPMENT

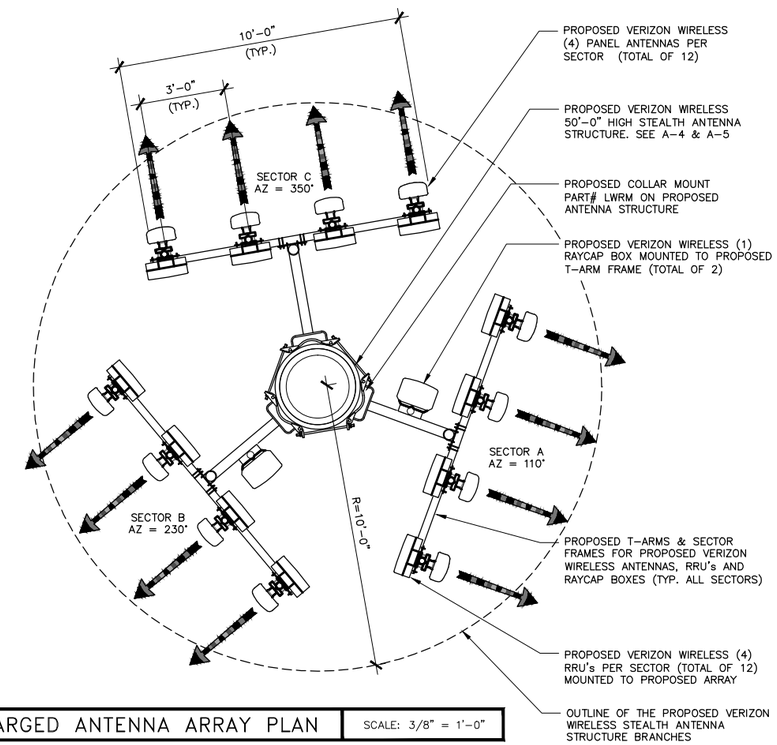

ENLARGED ANTENNA ARRAY PLAN | SCALE: 3/8" = 1'-0"

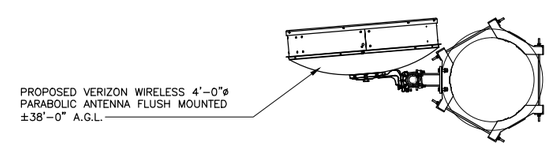

ENLARGED ANTENNA DISH PLAN | SCALE: 1/2" = 1'-0"

COAX/ANTENNA SCHEDULE

ANTENNA SECTOR	AZIMUTH	NUMBER OF ANTENNAS	NUMBER OF RRU's	COAX LENGTH	COAX SIZE
ALPHA	110°	4	4	60'±	7/8"
BETA	230°	4	4	60'±	7/8"
GAMMA	350°	4	4	60'±	7/8"
GPS	–	2		40'±	
MW DISH	–	1		55'±	7/8"

NOTE: CONSTRUCTION MANAGER TO FIELD VERIFY CABLE LENGTHS PRIOR TO OPENING, FABRICATION, OR INSTALLATION OF CABLES CHECK RF DATA SHEET.

NORTH

ENLARGED ANTENNA PLAN & COAX/ANTENNA SCHEDULE | SCALE: AS SHOWN | 2

verizon wireless
15505 SAND CANYON AVE.
BUILDING 'D' 1st FL.
IRVINE, CA 92618

W-T
W-T COMMUNICATION DESIGN GROUP, LLC.
WIRELESS INFRASTRUCTURE
8650 S. Eastern Ave. Suite 220
Las Vegas, NV 89123
PH: (702) 998-1000 FAX: (702) 998-1010
www.wtengineering.com

COPYRIGHT © 2015 W-T COMMUNICATION DESIGN GROUP, LLC.

SAC WIRELESS
5865 AVENIDA ENCINAS, STE. 142B
CARLSBAD, CA 92008

PROJECT NO:	T143451
DRAWN BY:	RD
CHECKED BY:	MMR

REV	DATE	DESCRIPTION
E	06/03/16	PER COMMENTS
D	08/24/15	CITY COMMENTS
C	08/21/15	LEGAL DISCRIPTION REVISION
B	07/07/15	100% ZONING DRAWINGS
A	06/09/15	90% ZONING DRAWINGS

NOT TO BE USED FOR CONSTRUCTION

IT IS A VIOLATION OF LAW FOR ANY PERSON, UNLESS THEY ARE ACTING UNDER THE DIRECTION OF A LICENSED PROFESSIONAL ENGINEER, TO ALTER THIS DOCUMENT.

GRAPEWIN
8306 GRAPEWIN STREET
EASTVALE, CA 92880
RIVERSIDE COUNTY

SHEET TITLE
ENLARGED SITE & ANTENNA PLAN

SHEET NUMBER
A-2

LANDSCAPING GENERAL NOTES:

ALL PLACEMENT OF LANDSCAPING SHALL MEET THE FOLLOWING CONDITIONS:

ALL PLANT MATERIAL SHALL BE PLANTED IN A MANNER WHICH IS NOT TO INTERFERE WITH OVERHEAD WIRES OR BE INTRUSIVE TO UTILITIES OR PAVEMENT.

NO TREES OR OTHER LANDSCAPING SHALL BE LOCATED CLOSER THAN 10 FEET TO A FIRE HYDRANT OR OTHER ABOVE GROUND UTILITIES.

NO LANDSCAPING SHALL INTERFERE WITH SITE REQUIREMENTS FOR SAFE INGRESS AND EGRESS.

NOTE:
- ANY AREA ALTERED FROM CONSTRUCTION TO BE RETURNED TO ITS ORIGINAL STATE. GRASS AREA SHALL BE SEEDED AND MAINTAINED UNTIL SEEDS HAVE GERMINATED.
- REFERENCE SURVEY BY DIAMONDBACK LAND SURVEYING DATED FEBRUARY 10, 2015 FOR ALL EASEMENT & LEASE DESCRIPTIONS

INSTALLATION STANDARDS:

1. PLANT MATERIAL SHALL CONFORM WITH THE CURRENT AMERICAN STANDARDS FOR NURSERY STOCK, PUBLISHED BY THE AMERICAN ASSOCIATION OF NURSERYMEN FOR THAT TYPE OF TREE OR SHRUB AT THE TIME OF INSTALLATION.
2. ALL TREES SHALL BE GROWN IN A NURSERY LOCATED IN THE STATE OF CALIFORNIA.
3. ALL PLANT MATERIAL SHALL BE INSTALLED FREE OF DISEASE AND IN A MANNER THAT ENSURES THE AVAILABILITY OF SUFFICIENT SOIL AND WATER TO SUBSTAIN HEALTHY GROWTH.
4. ALL TAGS, WIRES, PLASTIC TIES AND ROPE SHALL BE CUT FROM EACH TREE TO PREVENT GIRDLING OF THE TREE. THE BURLAP SHALL BE PULLED BACK FROM THE UPPER THIRD OF THE ROOTBALL. IF A PLASTIC 'BURLAP' IS USED, IT SHALL BE REMOVED IN ITS ENTIRETY FROM THE ROOTBALL.
5. ALL PLANT MATERIAL SHALL BE PLANTED WITH A MINIMUM OF DEPTH OF THREE (3) INCHES OF MULCHED MATERIAL AND A DIAMETER OF THREE (3) AROUND THE BASE OF THE TREE.
6. TREES SHALL BE STAKED WITH POSTS AND NOT STAKES IN AREAS OF HIGH WIND FOR ONE TO THREE YEARS TO ALLOW THE GROWTH OF PROPOSED ROOTS TO STABILIZE. ALL ROPES SHALL BE COVERED TO PREVENT CUTTING INTO THE BARK.
7. ANY EXCESS SOIL, CLAY, OR CONSTRUCTION DEBRIS SHALL BE REMOVED FROM THE PLANTING SITE, PRIOR TO PLANTING OF INDIVIDUAL TREES AT FINAL GRADE.
8. THE JURISDICTION, AT ITS DISCRETION, HAS THE RIGHT TO RETAIN A PROFESSIONAL LANDSCAPE ARCHITECT OR ARBORIST TO REVIEW SUBMITTED LANDSCAPE PLAN AND THE PROFESSIONAL LANDSCAPE ARCHITECT OR ARBORIST WILL SUBMIT A WRITTEN REPORT TO THE PLANNING AND ZONING COMMISSION. ALL EXPENSES INCURRED BY THE JURISDICTION FOR THE USE OF THE LANDSCAPE ARCHITECT OR ARBORIST SHALL BE REIMBURSED BY THE DEVELOPER.

PLANTING SEASONS:

1. PLANTS MUST BE PLANTED DURING THE FOLLOWING DATES: APRIL 1ST TO MAY 15TH AND SEPTEMBER 1ST TO OCTOBER 1ST
2. THE PLANTING PERIODS INDICATED MAY BE EXTENDED DUE TO WEATHER CONDITIONS OR OTHER FACTORS, WHICH MUST BE APPROVED BY THE LANDSCAPE ARCHITECT/ENGINEER.
3. THE CONTRACTOR WILL BE RELIEVED OF HIS GUARANTEE RESPONSIBILITY SHOULD THE OWNER REQUIRE PLANT MATERIAL INSTALLATIONS TO BE COMPLETED DURING OTHER TIMES THAN THE PLANTING PERIODS INDICATED.

PLANTING:

1. ALL SHADE TREES, ORNAMENTAL TREES, EVERGREEN TREES AND SHRUBS SHALL BE PLANTED IN HOLES EXCAVATED AT LEAST 3x THE WIDTH OF THE DIAMETER OF THE BALL OR CONTAINER AND DEEP ENOUGH SO THAT THE TOP OF THE BALL OR SOIL IN THE CONTAINER IS AT OR JUST ABOVE EXISTING GRADE.
2. ALL TWINE OR ROPE MUST BE CUT AND REMOVED AND THE BURLAP FOLDED AWAY FROM THE TOP OF THE BALL. THE EXCAVATION MUST BE BACKFILLED WITH THE PLANTING MIXTURE AND WATERED. ANY SETTLEMENT WILL BE FILLED WITH PLANTING MIXTURE.
3. A 4" DEEP SAUCER, SIMILAR TO THE DIAMETER OF THE PLANTING HOLE SHALL BE CREATED USING PLANTING MIX.
4. PLANTING MIX TO CONSIST OF 1/3 TOP SOIL, 1/3 SOIL FROM EXCAVATION, AND 1/3 MUSHROOM COMPOST (OR 1/3 PEAT MOSS).

CLEAN UP:

1. ALL DEBRIS GENERATED DURING THE INSTALLATION OF PLANT MATERIALS MUST BE REMOVED FROM THE SITE.
2. ALL PAVEMENTS AND WALKS MUST BE SWEPT AFTER EACH DAYS WORK. UPON COMPLETION OF THE WORK, ALL PAVEMENTS MUST BE WASHED TO REMOVAL MUD OR DIRT.

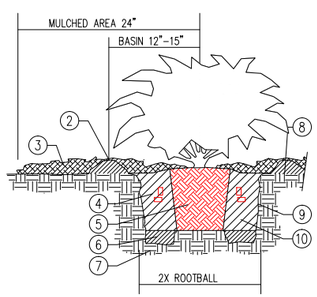

SECTION VIEW – N.T.S.

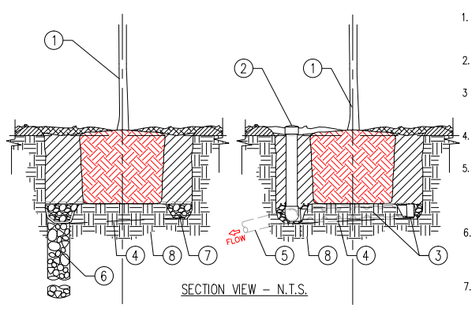

SECTION VIEW – N.T.S.

1. PLANT, SET TOP OF ROOTBALL 1-2" ABOVE FINISH GRADE- SEE PLANT PIT DETAIL
2. 4" OBSERVATION STANDPIPE WITH THREADED REMOVABLE CAP
3. 4" DIA. PERFORATED PVC PIPE "U", DRAIN TOWARDS OUTLET, WRAP IN FILTER FABRIC
4. SLOPE PIT BOTTOM TO DRAIN TOWARDS OBS. STANDPIPE-SUMP
5. 4" DRAIN PIPE OUTLET TO LANDSCAPE DRAIN SYSTEM OR DAYLIGHT DOWNHILL INTO 1CU. FT. GRAVEL DISSIPATOR WRAPPED IN FILTER CLOTH- BURIED
6. AUGER 8" DIA. HOLE 6' DEEP OR BELOW HARDPAN LAYER. FILL WITH GRAVEL. VERIFY POSITIVE DRAINAGE BEFORE PLANTING.
7. GRAVEL LAYER AT BOTTOM COVERED WITH FILTER CLOTH
8. NATIVE GRADE

PERCOLATION TEST

DIG A HOLE 12 INCHES WIDE AND DEEP, SCARIFY SIDES AND BOTTOM. FILL THE HOLE WITH WATER TO PRE MOISTEN THE SOIL (IMPORTANT FOR ACCURATE TEST). THE NEXT DAY RE-FILL THE HOLE, MEASURE HOURLY-IF THE WATER TAKES FROM THREE TO 12 HOURS TO DRAIN, THEN THE DRAINAGE IS ADEQUATE FOR MOST LANDSCAPE PLANTS (ABOUT 1 INCH PER HOUR). IF IT TAKES MORE THAN 12 HOURS, THEN THE DRAINAGE IS POOR. BUT BEFORE CORRECTIVE ACTION IS TAKEN, DIG DEEPER TO SEE IF THERE IS AN IMPERMEABLE LAYER OF SOIL RESTRICTING WATER MOVEMENT, BREAK UP ANY IMPERMEABLE LAYER AND REPEAT THE TEST.

PLANTING DETAILS | SCALE: NTS | 1

SPRINKLER HEADS

SYMBOL	DESCRIPTION	DISCHARGE- GPM Q	T	H	TT	TQ	F	PSI	RADIUS	PRECIP RATE	
	5 SERIES STREAM BUBBLER SPRINKLER										
	RAIN BIRD #1806-5H-B 6" POP-UP SPRAY ROOT WATERING SYSTEM		1.0					30	5 FT.	1.83 IN/HR	G
	RAIN BIRD RWS-1404					1.0		30		---	

ANTI-DRAIN CHECK VALVES (ADV) SHALL BE INSTALLED AT ANY WATER OUTLET SUFFERING LOW HEAD DRAINAGE-USE RAINBIRD SAM'S FOR POP-UPS – USE HUNTER HCV 50M-50F OR VALCON V5000 SERIES AT RISERS.

EQUIPMENT LEGEND

- M — NEW WATER METER AND SERVICE LINE (VERIFY SIZES AND FUNCTION IN THE FIELD)
- FEBCO MODEL 715 BRASS PRESSURE TYPE BACKFLOW PREVENTER, 12" ABOVE HIGHEST OUTLET. USE NEW BACKFLOW ONLY IF EXISTING SYSTEM HAS NONE OR IS INOPERABLE
- NIBCO T-113/T1580A GATE/BALL VALVE (LINE SIZE)
- Y — WILKENS YSBR WYE STRAINER (LINE SIZE) (30 MESH OR GREATER)
- P — WILKENS #500 PRESSURE REGULATOR (LINE SIZE). INSTALL ONLY IF EXISTING STATIC PRESSURE IS GREATER THAN 80 P.S.I.
- RAIN BIRD EFB-CP SERIES REMOTE CONTROL VALVE-INSTALL IN SHRUB BEDS WHEREVER POSSIBLE IN RECTANGULAR VALVE BOX AT RIGHT ANGLES TO HARDSCAPE
- C R — RAINBIRD ESP-SMT CONTROLLER (4 STATION) IN OUTDOOR LOCKING WALL MOUNT BOX INSTALL INCLUDED "WEATHER STATION" ON FASCIA BOARD OR CONTROLLER BOX/PEDESTAL, SENSOR TO HAVE CLEAR VIEW OF SKY
- — — — PVC WATER PIPE CL. 200 3/4"- 1 1/2" (LATERALS)
- — W — PVC PIPE/SLEEVE SCH. 40 – 2" MIN. OR2X DIA. OF PIPE OR WIRE BUNDLE. INSTALL UNDER ALL STREET OR DRIVE CROSSINGS

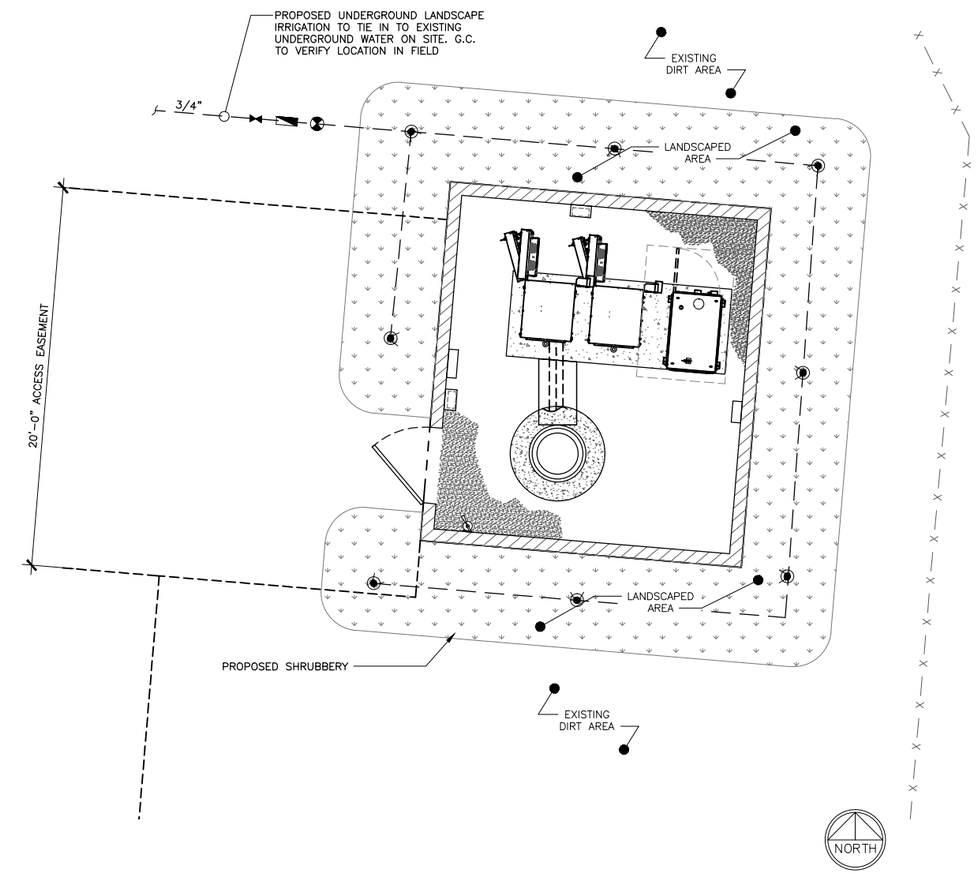

LANDSCAPE AND IRRIGATION PLAN | SCALE: 1/4"=1' | 2

verizon wireless

15505 SAND CANYON AVE.
BUILDING 'D' 1st FL.
IRVINE, CA 92618

W-T

W-T COMMUNICATION DESIGN GROUP, LLC.

WIRELESS INFRASTRUCTURE
8650 S. Eastern Ave. Suite 220
Las Vegas, NV 89123
PH: (702) 998-1000 FAX: (702) 998-1010
www.wtengineering.com

COPYRIGHT © 2015 W-T COMMUNICATION DESIGN GROUP, LLC.

SAC WIRELESS

5865 AVENIDA ENCINAS, STE. 142B
CARLSBAD, CA 92008

PROJECT NO:	T143451
DRAWN BY:	RD
CHECKED BY:	MMR

REV	DATE	DESCRIPTION
E	06/03/16	PER COMMENTS
D	08/24/15	CITY COMMENTS
C	08/21/15	LEGAL DISCRIPTION REVISION
B	07/07/15	100% ZONING DRAWINGS
A	06/09/15	90% ZONING DRAWINGS

NOT TO BE USED FOR CONSTRUCTION

IT IS A VIOLATION OF LAW FOR ANY PERSON, UNLESS THEY ARE ACTING UNDER THE DIRECTION OF A LICENSED PROFESSIONAL ENGINEER, TO ALTER THIS DOCUMENT.

GRAPEWIN
8306 GRAPEWIN STREET
EASTVALE, CA 92880
RIVERSIDE COUNTY

SHEET TITLE

LANDSCAPING

SHEET NUMBER

A-3

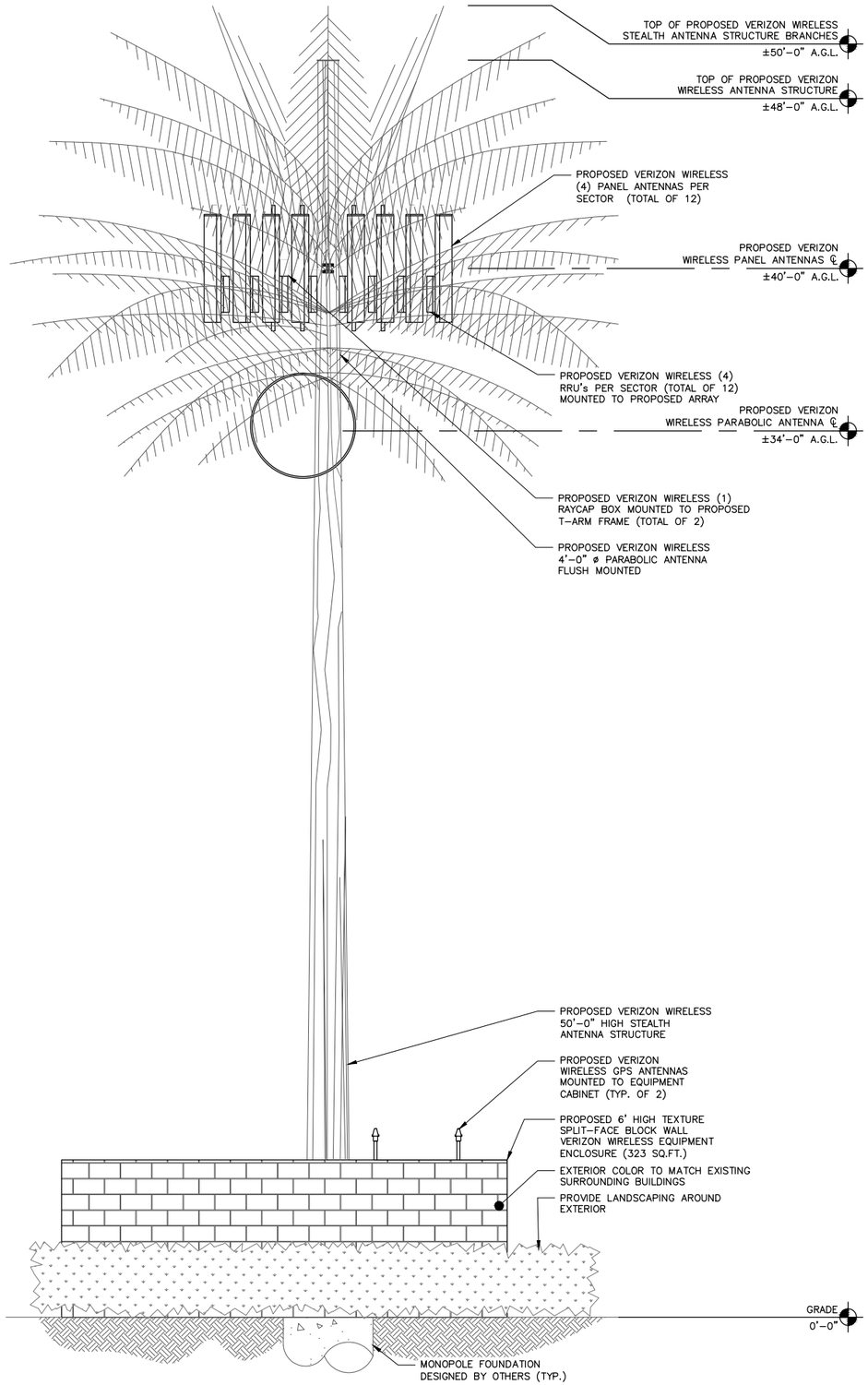

PROPOSED NORTH ELEVATION | SCALE: 3/8" = 1'-0" | 1

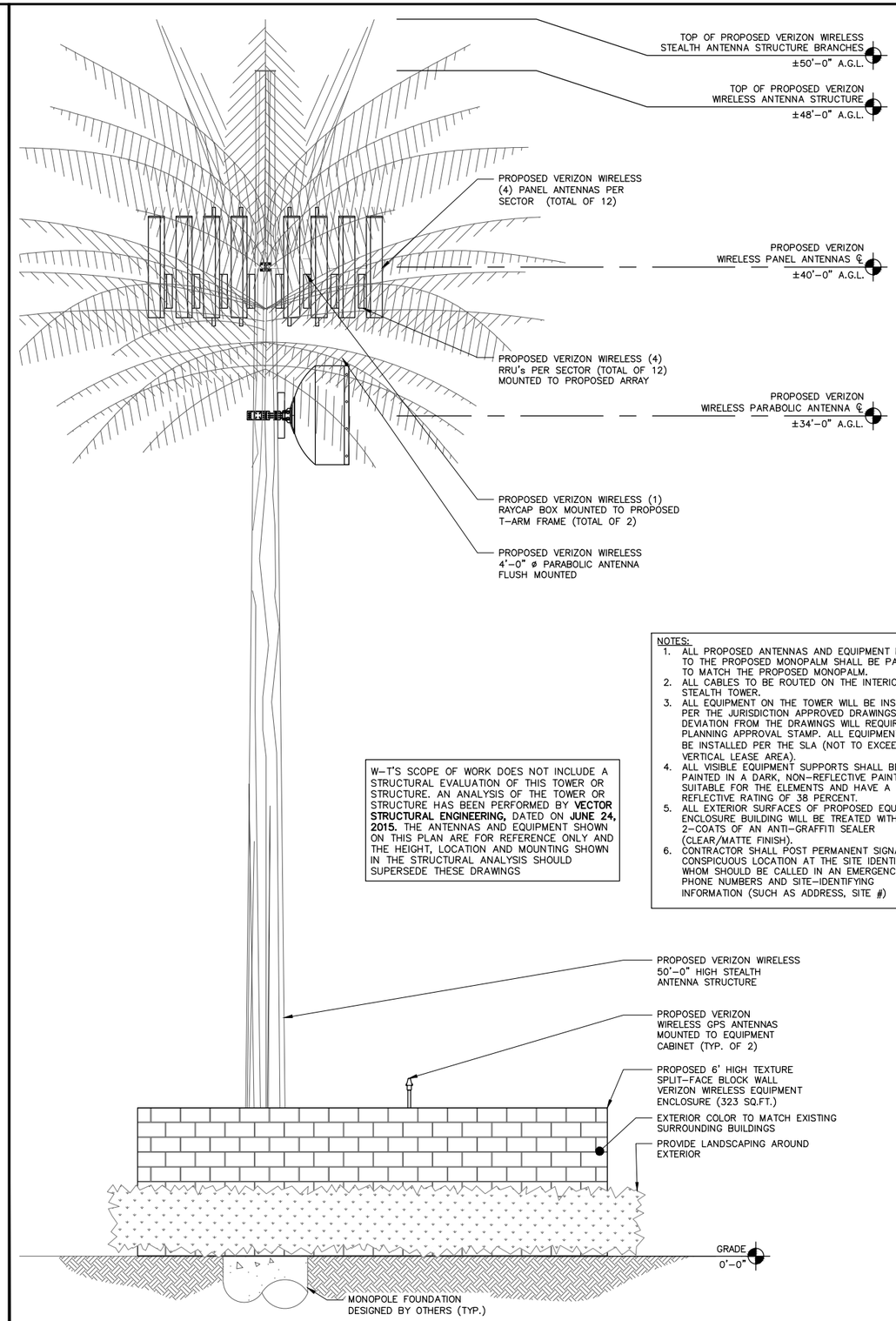

W-T'S SCOPE OF WORK DOES NOT INCLUDE A STRUCTURAL EVALUATION OF THIS TOWER OR STRUCTURE. AN ANALYSIS OF THE TOWER OR STRUCTURE HAS BEEN PERFORMED BY **VECTOR STRUCTURAL ENGINEERING,** DATED ON **JUNE 24, 2015.** THE ANTENNAS AND EQUIPMENT SHOWN ON THIS PLAN ARE FOR REFERENCE ONLY AND THE HEIGHT, LOCATION AND MOUNTING SHOWN IN THE STRUCTURAL ANALYSIS SHOULD SUPERSEDE THESE DRAWINGS

NOTES:
1. ALL PROPOSED ANTENNAS AND EQUIPMENT MOUNTED TO THE PROPOSED MONOPALM SHALL BE PAINTED TO MATCH THE PROPOSED MONOPALM.
2. ALL CABLES TO BE ROUTED ON THE INTERIOR OF STEALTH TOWER.
3. ALL EQUIPMENT ON THE TOWER WILL BE INSTALLED PER THE JURISDICTION APPROVED DRAWINGS. ANY DEVIATION FROM THE DRAWINGS WILL REQUIRE A PLANNING APPROVAL STAMP. ALL EQUIPMENT MUST BE INSTALLED PER THE SLA (NOT TO EXCEED VERTICAL LEASE AREA).
4. ALL VISIBLE EQUIPMENT SUPPORTS SHALL BE PAINTED IN A DARK, NON-REFLECTIVE PAINT COLOR SUITABLE FOR THE ELEMENTS AND HAVE A REFLECTIVE RATING OF 38 PERCENT.
5. ALL EXTERIOR SURFACES OF PROPOSED EQUIPMENT ENCLOSURE BUILDING WILL BE TREATED WITH 2-COATS OF AN ANTI-GRAFFITI SEALER (CLEAR/MATTE FINISH).
6. CONTRACTOR SHALL POST PERMANENT SIGNAGE IN CONSPICUOUS LOCATION AT THE SITE IDENTIFYING WHOM SHOULD BE CALLED IN AN EMERGENCY, WITH PHONE NUMBERS AND SITE-IDENTIFYING INFORMATION (SUCH AS ADDRESS, SITE #)

PROPOSED EAST ELEVATION | SCALE: 3/8" = 1'-0" | 2

verizon wireless
15505 SAND CANYON AVE.
BUILDING 'D' 1st FL.
IRVINE, CA 92618

W-T
W-T COMMUNICATION DESIGN GROUP, LLC.
WIRELESS INFRASTRUCTURE
8650 S. Eastern Ave. Suite 220
Las Vegas, NV 89123
PH: (702) 998-1000 FAX: (702) 998-1010
www.wtengineering.com
COPYRIGHT © 2015 W-T COMMUNICATION DESIGN GROUP, LLC.

SBC WIRELESS
5865 AVENIDA ENCINAS, STE. 142B
CARLSBAD, CA 92008

PROJECT NO:	T143451
DRAWN BY:	RD
CHECKED BY:	MMR

REV	DATE	DESCRIPTION
E	06/03/16	PER COMMENTS
D	08/24/15	CITY COMMENTS
C	08/21/15	LEGAL DISCRIPTION REVISION
B	07/07/15	100% ZONING DRAWINGS
A	06/09/15	90% ZONING DRAWINGS

NOT TO BE USED FOR CONSTRUCTION

IT IS A VIOLATION OF LAW FOR ANY PERSON, UNLESS THEY ARE ACTING UNDER THE DIRECTION OF A LICENSED PROFESSIONAL ENGINEER, TO ALTER THIS DOCUMENT.

GRAPEWIN
8306 GRAPEWIN STREET
EASTVALE, CA 92880
RIVERSIDE COUNTY

SHEET TITLE
ELEVATIONS

SHEET NUMBER
A-4

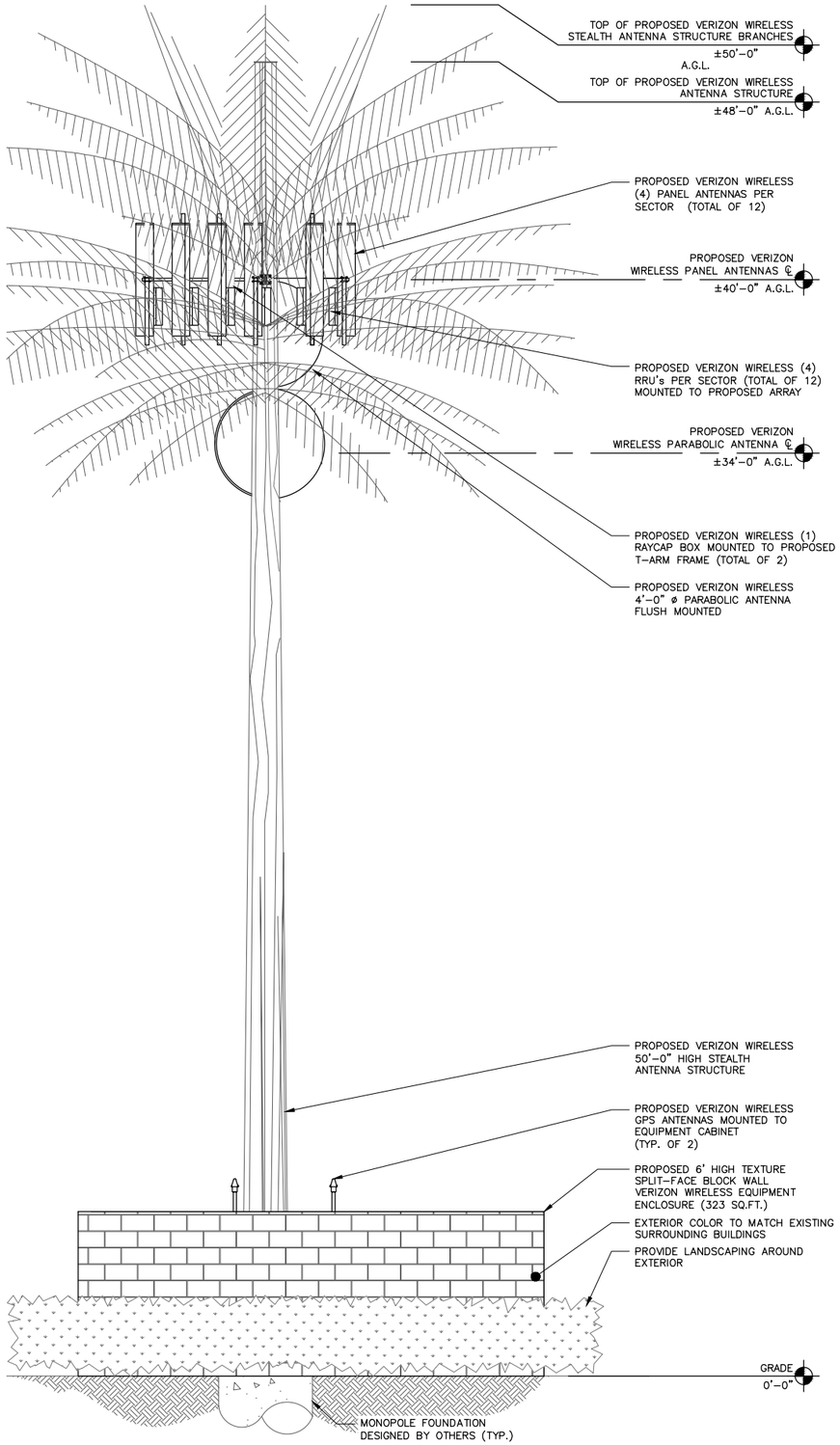

PROPOSED SOUTH ELEVATION | SCALE: 3/8" = 1'-0" | 1

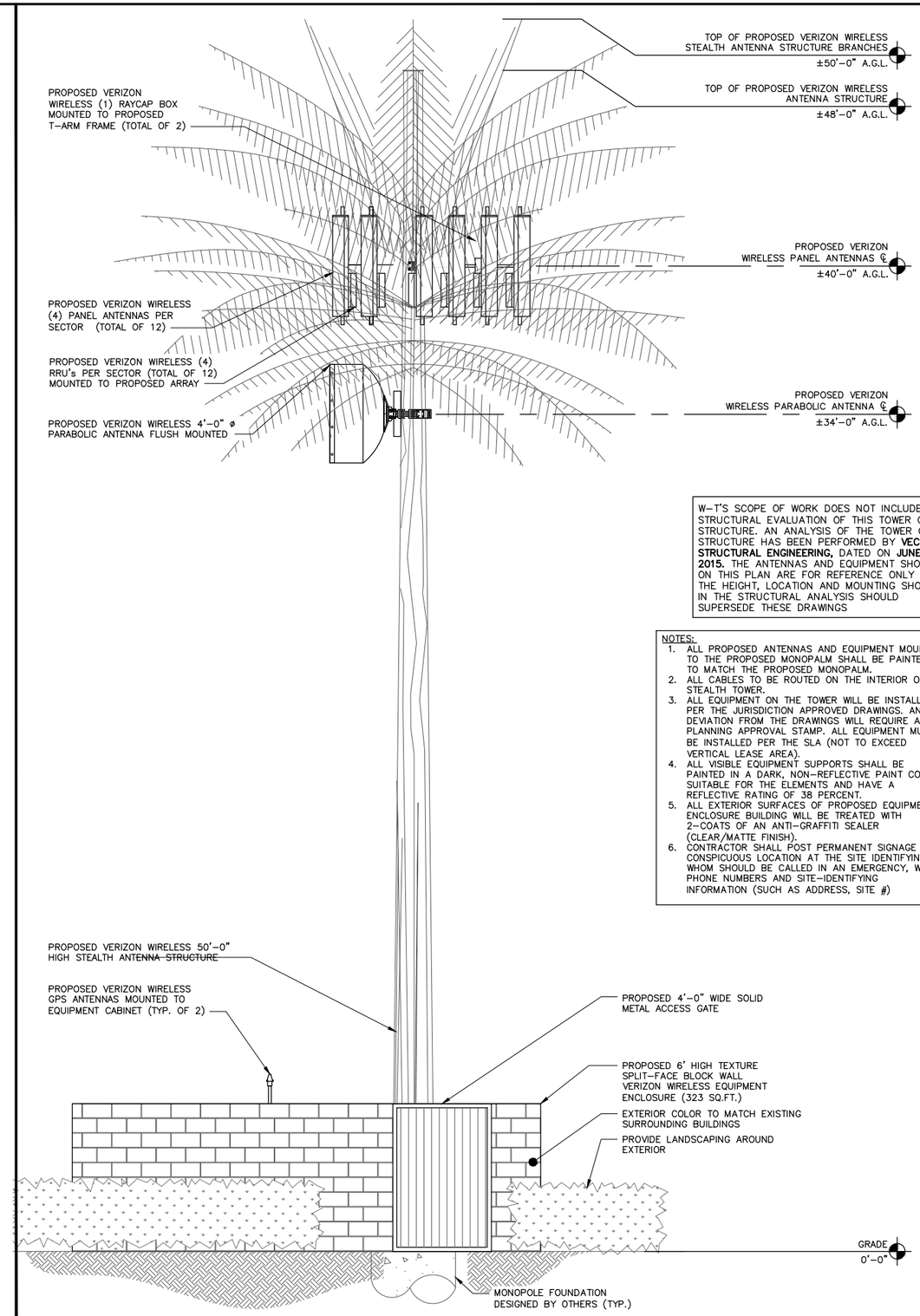

PROPOSED WEST ELEVATION | SCALE: 3/8" = 1'-0" | 2

W-T'S SCOPE OF WORK DOES NOT INCLUDE A STRUCTURAL EVALUATION OF THIS TOWER OR STRUCTURE. AN ANALYSIS OF THE TOWER OR STRUCTURE HAS BEEN PERFORMED BY **VECTOR STRUCTURAL ENGINEERING,** DATED ON **JUNE 24, 2015.** THE ANTENNAS AND EQUIPMENT SHOWN ON THIS PLAN ARE FOR REFERENCE ONLY AND THE HEIGHT, LOCATION AND MOUNTING SHOWN IN THE STRUCTURAL ANALYSIS SHOULD SUPERSEDE THESE DRAWINGS

NOTES:

1. ALL PROPOSED ANTENNAS AND EQUIPMENT MOUNTED TO THE PROPOSED MONOPALM SHALL BE PAINTED TO MATCH THE PROPOSED MONOPALM.
2. ALL CABLES TO BE ROUTED ON THE INTERIOR OF STEALTH TOWER.
3. ALL EQUIPMENT ON THE TOWER WILL BE INSTALLED PER THE JURISDICTION APPROVED DRAWINGS. ANY DEVIATION FROM THE DRAWINGS WILL REQUIRE A PLANNING APPROVAL STAMP. ALL EQUIPMENT MUST BE INSTALLED PER THE SLA (NOT TO EXCEED VERTICAL LEASE AREA).
4. ALL VISIBLE EQUIPMENT SUPPORTS SHALL BE PAINTED IN A DARK, NON-REFLECTIVE PAINT COLOR SUITABLE FOR THE ELEMENTS AND HAVE A REFLECTIVE RATING OF 38 PERCENT.
5. ALL EXTERIOR SURFACES OF PROPOSED EQUIPMENT ENCLOSURE BUILDING WILL BE TREATED WITH 2-COATS OF AN ANTI-GRAFFITI SEALER (CLEAR/MATTE FINISH).
6. CONTRACTOR SHALL POST PERMANENT SIGNAGE IN CONSPICUOUS LOCATION AT THE SITE IDENTIFYING WHOM SHOULD BE CALLED IN AN EMERGENCY, WITH PHONE NUMBERS AND SITE-IDENTIFYING INFORMATION (SUCH AS ADDRESS, SITE #)

verizon wireless
15505 SAND CANYON AVE.
BUILDING 'D' 1st FL.
IRVINE, CA 92618

W-T
W-T COMMUNICATION DESIGN GROUP, LLC.
WIRELESS INFRASTRUCTURE
8650 S. Eastern Ave. Suite 220
Las Vegas, NV 89123
PH: (702) 998-1000 FAX: (702) 998-1010
www.wtengineering.com
COPYRIGHT © 2015 W-T COMMUNICATION DESIGN GROUP, LLC.

SBC WIRELESS
5865 AVENIDA ENCINAS, STE. 142B
CARLSBAD, CA 92008

PROJECT NO:	T143451
DRAWN BY:	RD
CHECKED BY:	MMR

REV	DATE	DESCRIPTION
E	06/03/16	PER COMMENTS
D	08/24/15	CITY COMMENTS
C	08/21/15	LEGAL DISCRIPTION REVISION
B	07/07/15	100% ZONING DRAWINGS
A	06/09/15	90% ZONING DRAWINGS

NOT TO BE USED FOR CONSTRUCTION

IT IS A VIOLATION OF LAW FOR ANY PERSON, UNLESS THEY ARE ACTING UNDER THE DIRECTION OF A LICENSED PROFESSIONAL ENGINEER, TO ALTER THIS DOCUMENT.

GRAPEWIN
8306 GRAPEWIN STREET
EASTVALE, CA 92880
RIVERSIDE COUNTY

SHEET TITLE
ELEVATIONS

SHEET NUMBER
A-5

ATTACHMENT 4

NEW COMMENT RECEIVED

Kanika Kith

From: Marc Donohue
Sent: Monday, June 06, 2016 9:59 AM
To: Larry Oblea; Howard Feng; Karen Patel; William Van Leeuwen; Daryl Charlson
Cc: Eric Norris; Cathy Perring; 'jcavanaugh@cavanaughlaw.net'; Malinda Lim; Kanika Kith
Subject: FW: Cell Tower - 8306 Grapewin Street

Good Morning,

Please see the comments below.

Thank you,

Marc Donohue, CMC | City Clerk
City of Eastvale
12363 Limonite Ave., Suite 910
Eastvale, CA 91752
(951) 703-4421
www.eastvaleca.gov
Facebook | Twitter

From: Aundrea [mailto:amartin100503@gmail.com]
Sent: Thursday, June 02, 2016 10:13 PM
To: Marc Donohue
Subject: Cell Tower - 8306 Grapewin Street

Hello Marc,

I would like to add my comments in favor of the cell tower on Grapewin.

The cell service at Ronald Reagan Elementary School is very poor. Making it difficult for those staff members who need proper cell service to receive important calls, especially when not near a land line.

AND for those of us that volunteer in our children's classrooms who may need to received an important or emergency call. I personally have missed an urgent call about one of my children who does not go to RRES and was very upset once my phone update after leaving the school area and realized what had been missed. Yes my husband was called. But I am the first to be called for a specific reason. Because I can get to them first and faster.

Please consider this as another valid reason to build this cell tower.

Aundrea Martin
14537 Beechwood Ct, Eastvale

626-354-2907

Sent from my iPhone

ATTACHMENT 5

PLANNING COMMISSION STAFF REPORT

AND ATTACHMENTS FROM MAY 18 MEETING

City of Eastvale

Planning Commission Meeting Agenda
Staff Report

MEETING DATE: **MAY 18, 2016**

TO: **PLANNING COMMISSION**

FROM: **MORGAN WEINTRAUB, ASSISTANT PLANNER**

SUBJECT: **PROJECT NO. 15-1662 –** MINOR DEVELOPMENT REVIEW FOR THE INSTALLATION OF A NEW 50-FOOT-HIGH WIRELESS TELECOMMUNICATIONS TOWER, DISGUISED AS A "MONOPALM," WITH ANCILLARY EQUIPMENT IN A 17-FOOT BY 19-FOOT LEASE AREA AT 8306 GRAPEWIN

RECOMMENDATION

Staff recommends that the Planning Commission adopt:

a. Resolution No. 16-_____ approving a Categorical Exemption pursuant to Section 15303(d), New Construction, of the California Environmental Quality Act (CEQA) for Minor Development Plan No. 15-1662; and

b. Resolution No. 16- _____ approving Minor Development Review No. 15-1662 for a new 50-foot high wireless telecommunications tower, disguised as a monopalm, with ancillary equipment in a 17-foot by 19-foot lease area located at 8306 Grapewin (Assessor's Parcel Number 380-070-018) with access via an easement on an adjacent lot to the north (Assessor's Parcel Number 380-070-019), subject to conditions of approval.

BACKGROUND

The applicant, Verizon Wireless, to improve area cell phone coverage, has applied for a Minor Development Review for the installation of a new 50-foot-high wireless telecommunications tower disguised as a "monopalm" (artificial palm tree) with ancillary equipment in a lease area of 17 feet by 19 feet behind an existing single-family residence located at 8306 Grapewin Street (Assessor's Parcel Number 380-070-018). Service access to the facility will be via an easement on an adjacent lot to the north (Assessor's Parcel Number 380-070-019). Both parcels are owned by the same owner. (See **Figure 1**).

The proposed cell tower and equipment are eligible for Planning Director review and approval, and staff has determined that the project should be approved.

However, after sending notices of the Verizon Wireless application to property owners within a 600-foot radius of the subject site (as required by the Zoning Code), staff received written and e-mail correspondence from surrounding property owners concerned about the project's health and environmental impacts to the surrounding properties (see Attachment 4). These comments prompted the need for a public hearing.

Rather than a Planning Director's hearing, this application is being brought before the Planning Commission.

Figure 1 – Aerial Photo

DISCUSSION

Project Description

The proposed wireless facility is located behind an existing single-family residence at 8306 Grapewin, approximately 321 feet from the rear of the house. The facility will be accessible via a proposed 12-foot-wide access and utility easement located on the adjacent parcel to the north of the subject residence (see Figure 2 and Figure 3). Both parcels are owned by the same property owner and the owner currently resides in the house.

According to the applicant, the tower is needed to provide better cell phone service for Verizon customers in the area.

The ancillary telecommunications equipment consists of 12 panel antennas, one microwave dish, two equipment cabinets, one generator, and associated apparatus surrounded by a 6-foot-high block wall. As mentioned above, the tower facility will be designed to look like a palm tree (see Figure 2). All ground-level equipment will be installed within the boundary of the lease area and screened behind a 6-foot-high split-face block wall (see Figure 3).

Maintenance personnel will visit the site every four to six weeks to ensure the equipment is functioning properly and to perform regular and emergency maintenance via the access easement on the adjacent parcel to the north (see Figure 3).

Figure 2 – Verizon Access and Utility Easement

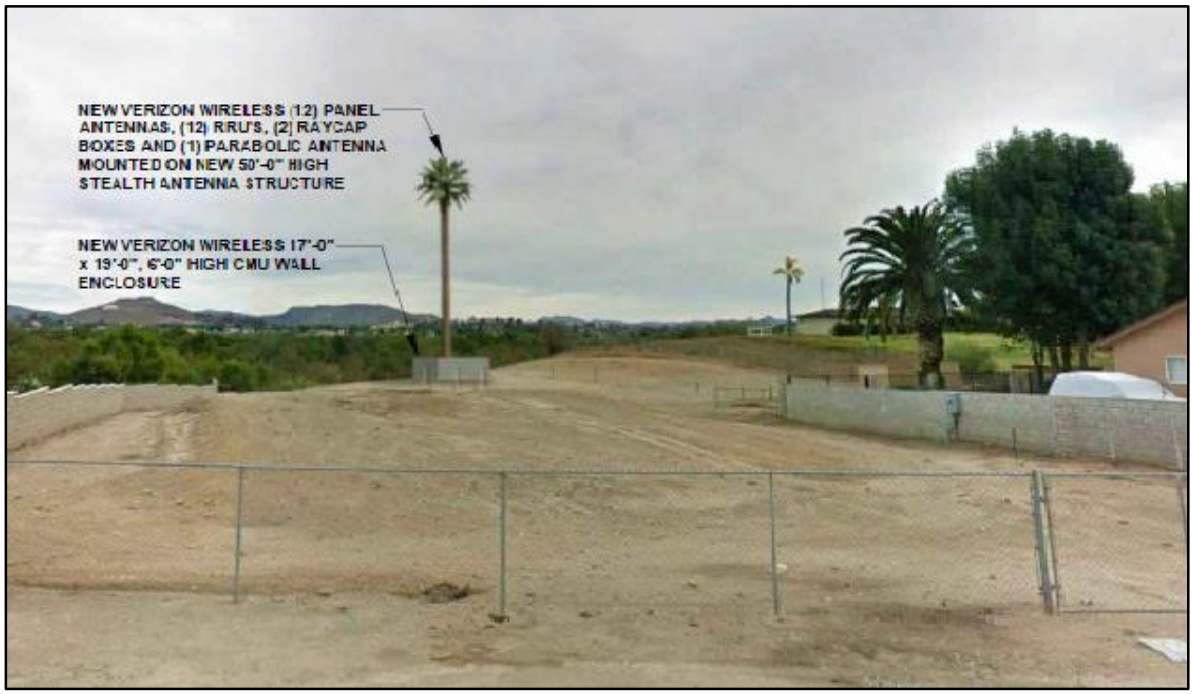

Figure 3 – Site Plan

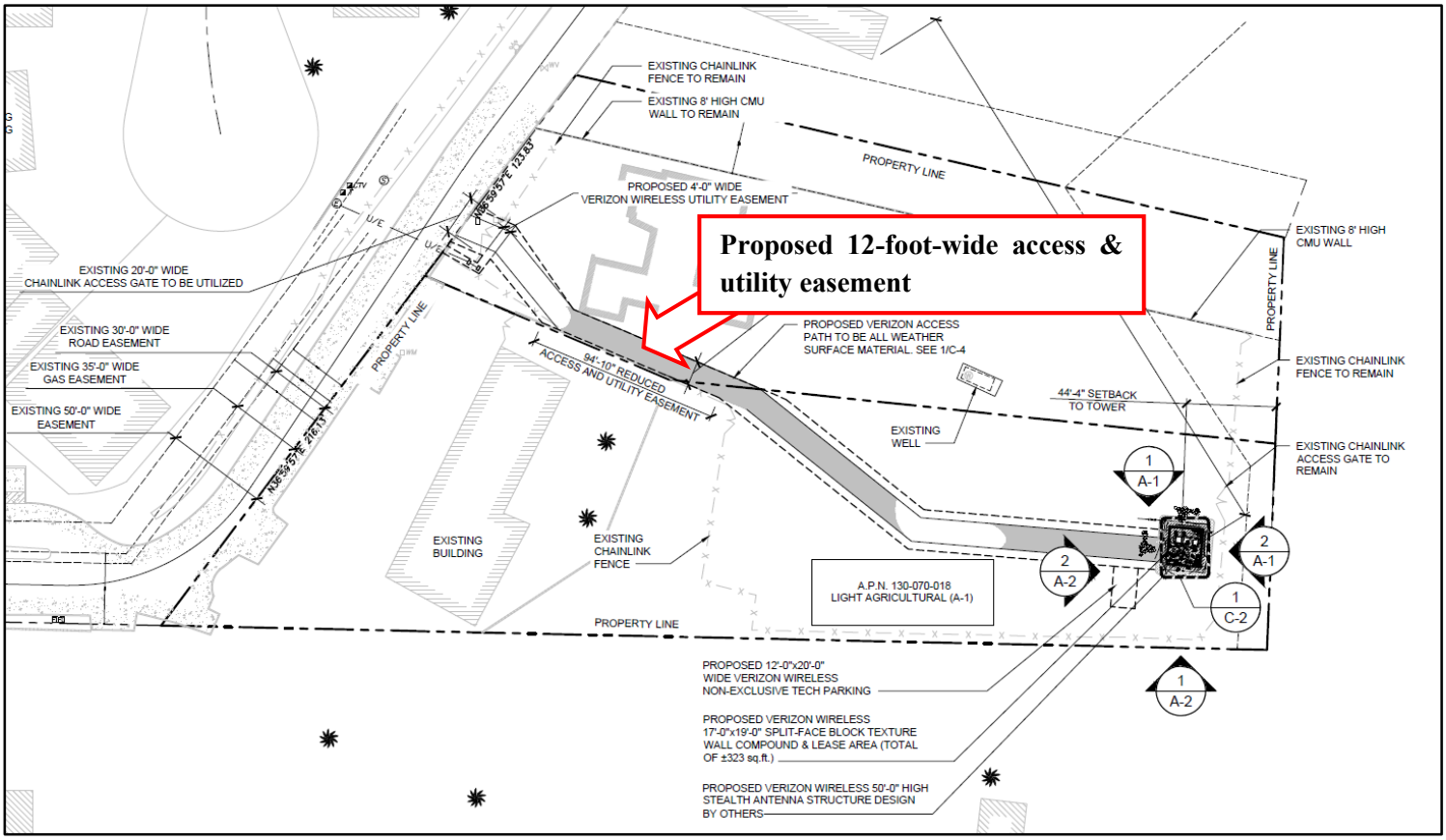

Project Analysis

According to the applicant, the site for the proposed wireless facility was chosen because the general area in this location has significant coverage gaps that lead to dropped calls and poor reception. The applicant indicated that the proposed site best meets its need to provide better reception and service to customers.

Staff is providing the Commission with the before-and-after coverage gap maps (Figures 5 and 6) so the Commission can assess the applicant's proposal. Figure 4 shows existing coverage without the new wireless facility. Figure 5 reflects the predicted coverage with the new facility. According to the applicant's map, the coverage gap would be closed by the new cell tower, providing improved coverage for its customers.

Figure 4 – Existing Coverage

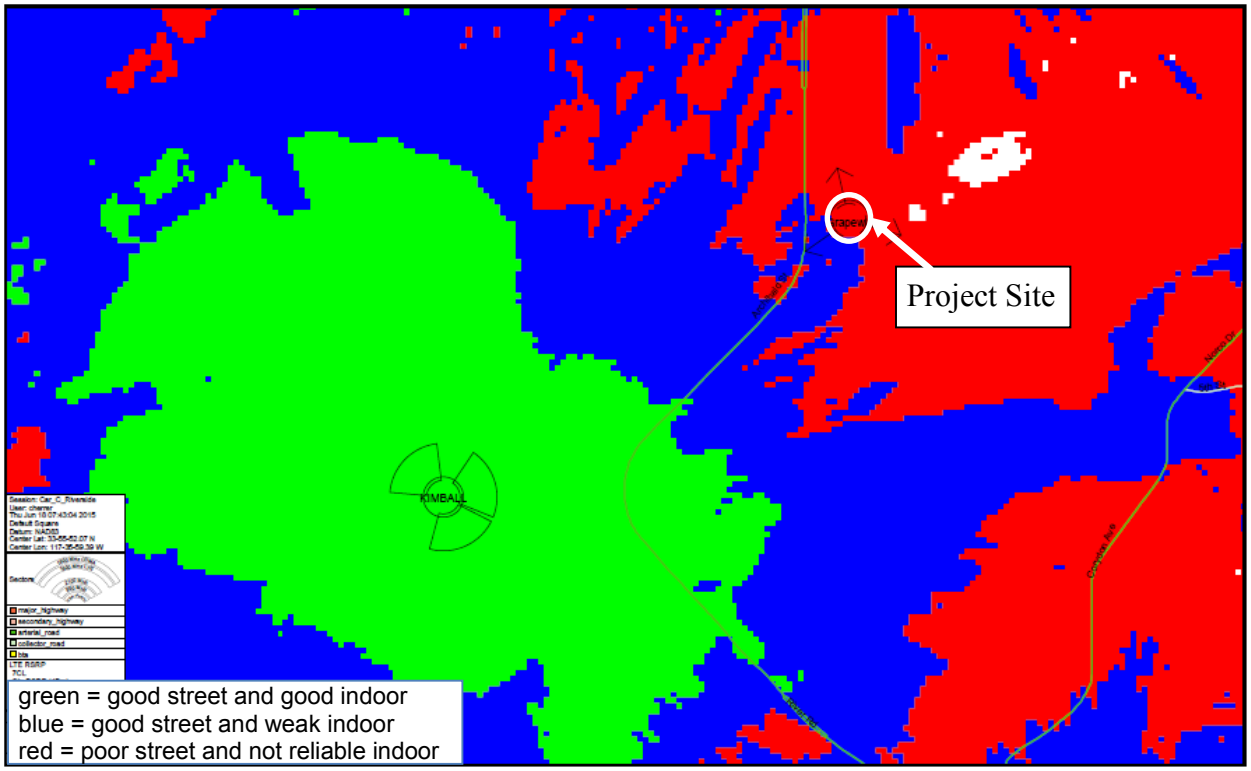

Figure 5 – Coverage with New Facility

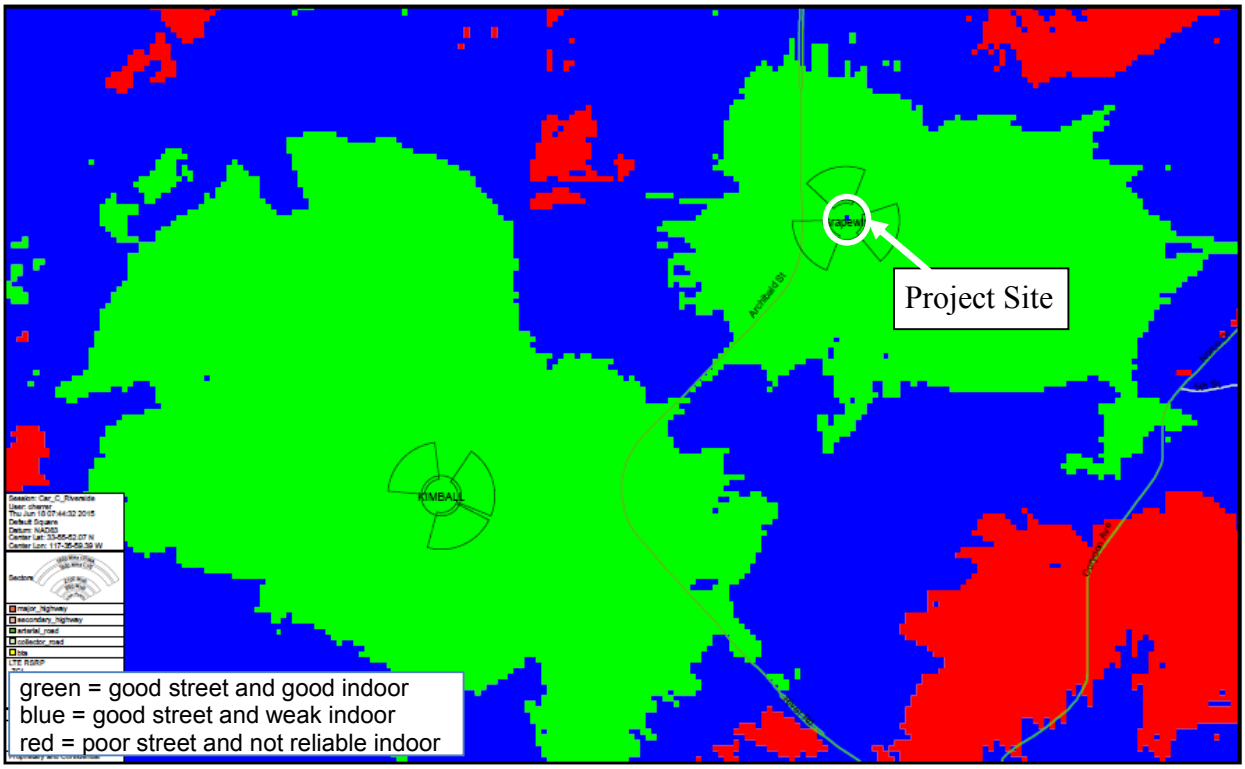

General Plan Consistency

The General Plan land use designation for the project site is Low Density Residential (LDR), which provides for the development of detached single-family residential dwelling units and ancillary structures on large parcels. The site is currently developed with a single-family home.

Zoning Code Consistency

The zoning designation of the site is Light Agriculture (A-1). Section 4.14 of the Eastvale Zoning Code permits a wireless telecommunications facility use in the A-1 zoning district, subject to the approval of a Minor Development Review application[1].

The proposed wireless facility is located at the rear of the subject site adjacent to the Santa Ana River. An enlarged view of the proposed equipment facility is shown in Figure 6 and elevations of the proposed facility are shown in Figure 7. Staff has also provided a full-size set of plans for the Commission as a separate attachment to this report.

[1] Note: Per the Eastvale Zoning Code, Minor Development Plan for wireless telecommunications facilities can be reviewed and approved by the Planning Director at a public hearing. However, given the proximity of the facility to the existing homes, the Planning Director has forwarded the Minor Development Plan to the Planning Commission for review and approval.

Figure 6 – Enlarged Site Plan

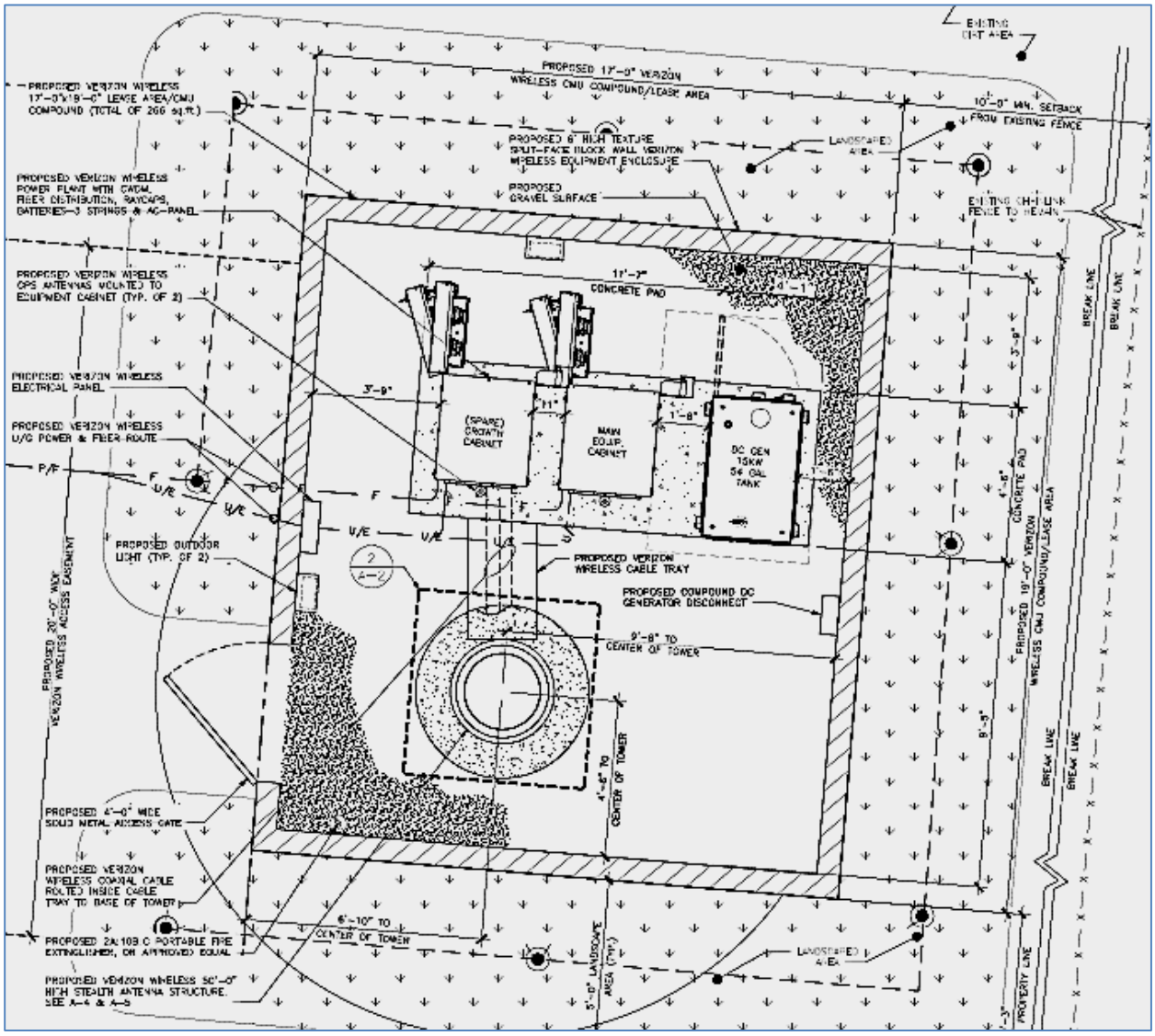

Figure 7 – Elevations

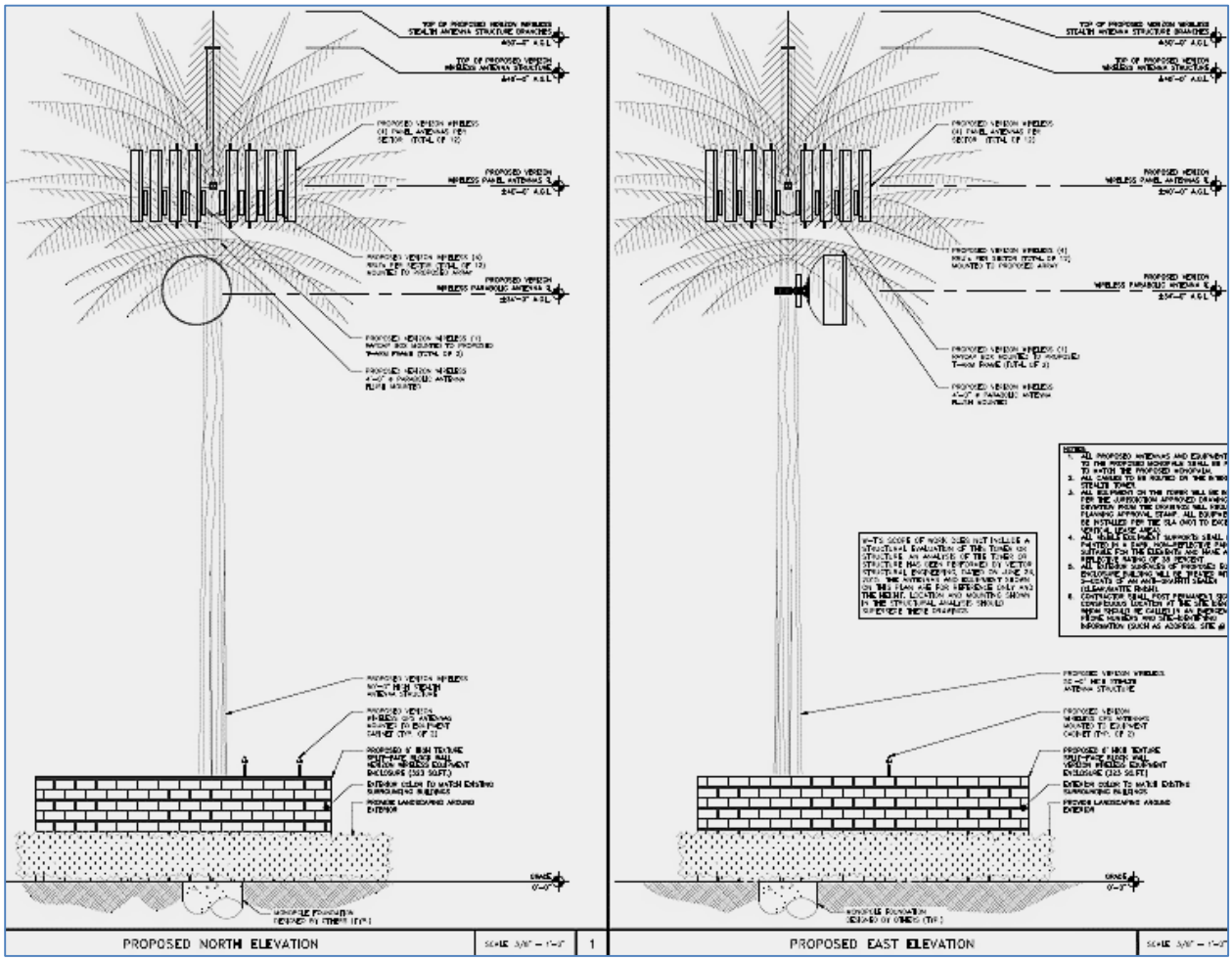

The proposed facility, including the proposed monopalm and enclosed equipment, comply with all applicable Zoning Code requirements as described below:

- **Area Disturbance.** The proposed project is located on an existing graded single-family lot minimizing disturbance to the site.
- **Fencing and Walls.** All proposed ancillary ground-mounted equipment will be enclosed behind a 6-foot decorative block wall.
- **Height.** The proposed monopalm is 50 feet in height, 20 feet below the maximum height of 70 feet.
- **Setbacks.** The telecommunication facility is set back 321 feet from the existing residence on the same lot, 288 feet from the nearest residence on adjacent lot, and 144 feet from the nearest structure on the adjacent lot. All setbacks exceed the minimum setback of 200 percent (100 feet) of the facility height to the nearest habitable dwelling units.

- **Paved Access.** An easement via an adjacent well site to the north to the telecommunication facility will be paved.
- **Communication and Power Lines.** There will be no overhead communication or power lines to the facility.
- **Lighting.** Per request from the police department, the facility has been conditioned to install motion-sensor lighting so that it would not be on all night, but will be on when someone goes by.

Design and Aesthetics

All new wireless communications facilities are required to have the least possible visual impacts on the surrounding area. The proposed monopalm is considered a "disguised" wireless facility. As shown in Figures 2 and 7, the 50-foot-high tower is designed to look like a palm tree.

The equipment cabinets and all related equipment will be located within a decorative block structure that will not visible to the public.

Staff is recommending a condition to require the applicant to plant new palm trees around the proposed facility. The results of this method of architectural design (i.e., disguisement), the proposed monopalm and existing and new palm trees, and the decorative block wall building to screen the related equipment cabinets will aid in reducing aesthetic visual impacts. Thus, the proposed monopalm antenna will have low visual impact on the surrounding environment as shown in Figure 8.

Figure 8: Photosimulation of New Wireless Facility as Viewed from Grapewin Street

In order to approve a disguised wireless facility (as is proposed in this case), one of the findings is that the facility must be "minimally visually intrusive." This term is not specifically defined, and the Commission is free to define what is visually appropriate. Historically, facilities such as monopines and monopalms and field lights have been considered to meet the standard.

The Planning Commission is free to interpret this finding as it deems appropriate. The Commission can choose to accept the applicant's proposal <u>or</u> the Commission can direct the applicant to seek other alternatives.

<u>Public Health and Safety</u>

As cell phone use expanded during the 1990s, concerns grew that the use of cell phones and cell towers, in particular, posed a public health and safety threat resulting from electromagnetic fields, or EMFs. The Federal Communications Commission researched the issue and in the late 1990s determined that the use of cell phones and cell towers did not create a public health and safety problem, provided that the equipment is built and operated according to federal standards.

While the issue of placing cell phone towers in residential areas is often controversial, the Planning Commission should recognize that federal law prohibits local agencies from denying land use entitlements for cell phone providers like Verizon based solely on health risk issues. As noted above, cellular equipment (including the cell phones themselves) must be designed and operated

according to federal standards, which have been designed to limit exposure to cellular signals to safe levels. If the antenna and equipment do not meet federal standards, federal permits will not be issued.

ENVIRONMENTAL ANALYSIS

The project qualifies for a Categorical Exemption pursuant to Section 15303, New Construction or Conversion of Small Structures, to be exempt from further environmental review requirements contained in the California Environmental Quality Act (CEQA). The proposed project is for the installation of a 50-foot tall telecommunications tower disguised as a monopalm and ancillary ground mounted equipment within a 17-foot by 19-foot lease area on a previous graded single family residential lot.

As required by the Multiple Species Habitat Conversation Plan (MSHCP), a Biological Assessment Report was prepared by ARCHON Consulting Company to confirm that the property does not interfere with any biological habitat. The report concludes that no portion of the property exhibits jurisdictional waters based on the FEMA plain overlay. While the property includes a small area that meets the riparian designation the proposed project avoids the area. No locations were observed on the Property that correlates with the criteria for vernal pool formation.

The biological report references a number of requirements of the MSHCP and state, local and federal law. Several of these have been included as conditions of approval, solely to highlight for the applicant the need to comply with these requirements. The applicant is responsible for compliance with all existing local, state, and federal regulations regardless of whether they are listed as conditions of approval.

PUBLIC NOTIFICATION

Public notification was sent to surrounding property owners within a 600-foot radius of the subject site. Three comment letters were received requesting a public hearing.

- A letter received on April 12, 2016 from Mr. Sean McMullin requested a public hearing on behalf of his wife, Heidi McMullin.

- A letter received on April 18, 2016 from Mr. Jim Sullivan on behalf of Mr. & Mrs. Kurt DeStuben, 8230 Grapewin Street; and Mr. & Mrs. Lyle Smith, 8222 Grapewin Street requests more information on the project including any study done by the applicant regarding the health and environmental effects of the immediate, surrounding homes. In addition, a call from Mr. Sullivan requested an alternative site analysis.

- A letter received on May 8, 2016 from Mr. Bashar Madani requested to review any environmental and safety studies. In addition, Mr. Madani sent another letter in opposition to the proposed project with the following comments:

    - If the timing of the public notice is adequate and if the proposed facility meets the height and setback standards in the Zoning Code

- Requesting a study showing compliance with the aircraft zone and FAA, and a study for the electromagnetic frequency from the facility.
- Would like to know if the project is approved and if residents claim cancer or a health related problem from the facility, who will pay for the lawsuit.

Correspondence received from nearby residents is included as Attachment 4.

A map of the 600-foot radius notification area is included as Attachment 5.

REQUIRED PROJECT FINDINGS:

California Environmental Quality Act

Finding: The project qualifies for a categorical exemption from the California Environmental Quality Act (CEQA) under Section 15303, New Construction or Conversion of Small Structures. The exemption allows for the installation of "…small new equipment and facilities in small structures…" as well as an extension of utilities and the construction of accessory uses.

Evidence: The proposed project is for the installation of a 50-foot-tall telecommunications tower disguised as a monopalm and ancillary ground-mounted equipment within a 17-foot by 19-foot lease area on an existing single-family residential lot.

Minor Development Review

Eastvale Zoning Code Section 2.1 requires that the Planning Commission make the following findings in order to approve Minor Development Review. Staff has recommended the following findings for Planning Commission approval:

Finding 1: The proposed use must conform to all requirements of the City of Eastvale General Plan and with all applicable requirements of state law and the ordinance of the City of Eastvale.

Evidence: The proposed wireless facility conforms to the requirements of the General Plan in that the site has a land use designation of Low Density Residential (LDR), which provides for disguised wireless communication facilities through the Minor Development Review process. The proposed wireless antenna will also provide Eastvale residents with improved Verizon cellular service. The project is consistent with the requirements of the Zoning Ordinance in that the use is permitted in the Light Agricultural (A-1) zoning district subject to the approval of a Minor Development Review. It is also consistent with the requirements for approval as outlined in Sections 2.1 and 4.14 of the Zoning Ordinance. Based on staff's review of the project, it has been determined that the project conforms to City requirements.

Finding 2: The proposed architecture, site design, and landscape are suitable for the purposes of the building and the site and will enhance the character of the neighborhood and community.

Evidence: The design of the facility is intended to simulate a palm tree in order to be consistent with the definition of a disguised facility. Further, all mechanical equipment will be screened from view by an enclosed building constructed of decorative split-face block wall. The facility also

meets the minimum development standards outlined in Sections 2.1 and 4.14 of the Eastvale Zoning Code, which is intended to protect the public health, safety, and welfare.

Finding 3: The architecture, including the character, scale, and quality of the design, relationship with the site and other buildings, building materials, colors, screening of exterior appurtenances, exterior lighting, and signing and similar elements, establishes a clear design concept and is compatible with the character of buildings on adjoining and nearby properties.

Evidence: The facility is designed and sited so that it is minimally intrusive to the surrounding area. All mechanical equipment will be screened from view by an enclosed building constructed of decorative split-face block wall and the tower will be designed to look like a palm tree. Thus, the proposed facility will not impact the character of the community.

Finding 4: The proposed project will not create conflicts with vehicular, bicycle, or pedestrian transportation modes of circulation.

Evidence: The wireless facility has been placed at approximately 320 feet from the nearest habitable structure and located in the back (east) portion of the property so as not to impede future development of the site. Access to the site is via an access easement on the adjacent parcel to the north of the property, which will provide on-site access for monthly maintenance visits and not result in parking on the street. Therefore, the proposed facility will not create conflicts with existing vehicular, bicycle, or pedestrian circulation.

Finding 5: If the project is located within the Chino Airport Influence Area, the proposed project is consistent with the most recently adopted version of the Chino Airport Land Use Compatibility Plan.

Evidence: The project is not located within the Chino Airport Influence Area, and thus not subject to the Chino Airport Land Use Compatibility Plan.

Disguised Wireless Facility

Eastvale Zoning Code Section 4.14, Disguised Wireless Communication Facilities, requires that the Planning Commission make the following findings in order to approve Minor Development Review 15-1662. Staff has recommended the following findings for Planning Commission approval:

Finding 1: The facility is designed and sited so as to be minimally visually intrusive.

Evidence: The proposed wireless facility, consisting of a 50-foot-high monopalm and ancillary ground-mounted equipment, is located at the rear of a large residential lot enclosed behind a 6-foot decorative block wall adjacent to the Santa Ana River. The proposed facility and the proposed 17-foot by 19-foot enclosed equipment area are not visible from the street or from the rear of adjacent residential or commercial properties. Photosimulations provided by the applicant indicate that the top of the disguised monopalm will be only partially visible from the street due to the monopalm being screened by the existing residence and blending in with other similar palm trees nearby.

Finding 2: Ancillary equipment is located entirely within an equipment enclosure.

Evidence: The proposed equipment enclosure is a 6-foot-high split-faced block wall, and is located at the rear of the subject existing single-family residence, screening all equipment from public view.

Finding 3: The application has met all Zoning Code development standards.

Evidence: According to Section 4.14(A) of the Eastvale Zoning Code, Minor Development Review 15-1662 has met all applicable development standards (heights, setbacks, etc.) set forth.

Finding 4: The Planning Commission has determined: (1) that notice to the Federal Aviation Administration is not required; or, (2) received a determination of No Hazard to Air Navigation for the project issued by the Federal Aviation Administration.

Evidence: A letter provided by the applicant from the Federal Aviation Administration shows that the proposed monopalm is not located within the flight pattern of any nearby airports or private landing strips. Furthermore, the project is not subject to any additional Airport Land Use Commission reviews or determinations as the property is not located within any airport influence areas.

RECOMMENDATION

Staff recommends Planning Commission adoption of the following:

- Resolution No. 16-_____ approving a Categorical Exemption pursuant to CEQA for Minor Development Plan No. 15-1662; and

- Resolution No.16-_____ approving Minor Development Plan No. 15-1662 for the installation of a new wireless facility disguised as a monopalm and ancillary telecommunications equipment in a lease area of approximately 17 feet by 19 feet located at 8306 Grapewin (Assessor's Parcel Number 380-070-018) with access via an easement on an adjacent lot to the north (Assessor's Parcel Number 380-070-019), subject to conditions of approval.

The Planning Commission's decision on this project is final, unless the decision is appealed to the City Council.

Planning Commission Options

The following alternatives are available to the Planning Commission:

1. Approve the project with additional changes and/or conditions.

2. Continue the public hearing and direct the applicant to make revisions.

3. Deny the project.

Staff's recommendation is that the Planning Commission approve the project.

FISCAL IMPACT

This project will not have a fiscal impact to the City of Eastvale because the cost of processing this application is fully paid for by the applicant and will not burden the City financially.

ATTACHMENTS

1. PC Resolution and Conditions of Approval
2. Notice of Exemption
3. Coverage Before and After
4. Comments Received
5. Notification Map
6. FAA Letter
7. Biological Report
8. Development Plans

Prepared by: Morgan Weintruab and Rick Gomez, Planners
Reviewed by: Eric Norris, Planning Director
Mark Teague, Environmental Manager
John Cavanaugh, City Attorney

ATTACHMENT 1

PC RESOLUTION
AND
CONDITIONS OF APPROVAL

PC RESOLUTION NO. 16-____

A RESOLUTION OF THE PLANNING COMMISSION OF THE CITY OF EASTVALE, CALIFORNIA, APPROVING MINOR DEVELOPMENT REVIEW NO. 15-1662 FOR THE INSTALLATION OF A NEW WIRELESS TELECOMMUNICATIONS FACILITY THAT WILL BE DISGUISED AS A 50-FOOT-TALL MONOPALM AND ANCILLARY EQUIPMENT LOCATED AT 8306 GRAPEWIN STREET (ASSESSOR'S PARCEL NUMBER 130-070-018) AND ACCESS VIA AN ADJACENT PARCEL TO THE NORTH (ASSESSOR'S PARCEL NUMBER 130-070-019)

WHEREAS, an application for a Minor Development Review (15-1662) for the installation of a new 50-foot-high wireless telecommunications pole disguised as a monopalm and ancillary equipment in an 17-foot by 19-foot lease area behind an existing single-family home located at 8306 Grapewin Street in Eastvale, Assessor's Parcel Number 130-070-018, and access to service the proposed facility via adjacent parcel to the north, Assessor's Parcel Number 130-070-019, has been filed by Verizon Wireless; and

WHEREAS, the proposed Minor Development Review is considered a project as defined by the California Environmental Quality Act (CEQA), Public Resources Code Section 21000 et seq.; and

WHEREAS, the Planning Director determined that the project qualifies for a Categorical Exemption from the provisions of CEQA per Section 15303(d), New Construction, of the CEQA Guidelines; and

WHEREAS, the City of Eastvale Planning Department on May 8, 2016, published a legal notice in the *Press Enterprise*, a local paper of general circulation, indicating the date and time of the public hearing in compliance with state law concerning Minor Development Review No. 15-1662, and mailed said public hearing notice to each property owner within a 600-foot radius of the project site in accordance with state law; and

WHEREAS, the City of Eastvale Planning Commission conducted a duly noticed public hearing on May 18, 2016, at which time it received public testimony concerning Minor Development Review No. 15-1662, and considered a CEQA Categorical Exemption for the proposed project and the proposed Minor Development Review for the Verizon wireless telecommunications facility.

NOW, THEREFORE, the Planning Commission of the City of Eastvale does hereby resolve, determine, and order as follows:

SECTION 1. ENVIRONMENTAL FINDINGS

Pursuant to CEQA, within the meaning of Public Resources Code Sections 21080(e) and 21082.2 within the record and/or provided at the public hearing, the Planning Commission hereby finds and determines that the project was adequately analyzed according to the CEQA Guidelines and qualified for an Exemption under Section 15303(d), New Construction, as supported by the following Findings and Evidence:

Finding: The proposed project is exempt from further environmental review requirements contained in CEQA pursuant to Section 15303(d), New Construction.

Evidence: The proposed project will extend wireless telecommunication utilities. The proposed project will not result in damage to scenic resources including but not limited to trees, historic buildings, rock outcroppings, or similar resources within a highway officially designated as a state scenic highway. The proposed project is not located on a site which is included on any list compiled pursuant to Section 65962.5 of the Government Code and the project will not cause a substantial change in the significance of a historical resource. In consideration of this, staff has determined that the project satisfies the requirements of a Categorical Exemption pursuant to CEQA Section 15303(d), New Construction, and is determined to be exempt from further environmental review requirements contained in CEQA.

SECTION 2. MULTIPLE SPECIES HABITAT CONSERVATION PLAN (MSHCP)

The project is found to be consistent with the MSHCP. The project is located outside of any MSHCP criteria area, and mitigation is provided through payment of the MSHCP Mitigation Fee.

SECTION 3. MINOR DEVELOPMENT REVIEW FINDINGS

Pursuant to Eastvale Zoning Code Section 2.1, the Planning Commission hereby finds and determines as follows:

Finding 1: The proposed use must conform to all the requirements of the City of Eastvale General Plan and with all applicable requirements of state law and the ordinance of the City of Eastvale.

Evidence: The proposed wireless facility conforms to the requirements of the General Plan in that the site has a land use designation of Low Density Residential (LDR), which provides for disguised wireless communication facilities through the Minor Development Review process. The proposed wireless antenna will also provide Eastvale residents with improved Verizon cellular service. The project is consistent with the requirements of the Zoning Ordinance in that the use is permitted in the Light Agricultural (A-1) zoning district subject to the approval of a Minor Development Review. It is also consistent with the requirements for approval as outlined in Sections 2.1 and 4.14 of the Zoning Ordinance. Based on staff's review of the project, it has been determined that the project conforms to City requirements.

Finding 2: The proposed architecture, site design, and landscape are suitable for the purposes of the building and the site and will enhance the character of the neighborhood and community.

Evidence: The design of the facility is intended to simulate a palm tree in order to be consistent with the definition of a disguised facility. Further, all mechanical equipment will be screened from view by an enclosed building constructed of decorative split-face block wall. The facility also meets the minimum development standards outlined in Sections 2.1 and 4.14 of the Eastvale Zoning Code, which is intended to protect the public health, safety, and welfare.

Finding 3: The architecture, including the character, scale and quality of the design, relationship with the site and other buildings, building materials, colors, screening of exterior appurtenances, exterior lighting, and signing and similar elements, establishes a clear design concept and is compatible with the character of buildings on adjoining and nearby properties.

Evidence: The facility is designed and sited so that it is minimally intrusive to the surrounding area. All mechanical equipment will be screened from view by an enclosed building constructed of decorative split-face block wall and the tower will be designed to look like a palm tree. Thus, the proposed facility will not impact the character of the community.

Finding 4: The proposed project will not create conflicts with vehicular, bicycle, or pedestrian transportation modes of circulation.

Evidence: The wireless facility has been placed at approximately 320 feet from the nearest habitable structure and located in the back (east) portion of the property so as not to impede future development of the site. Access to the site is via an access easement on the adjacent parcel to the north of the property, which will provide on-site access for monthly maintenance visits and not result in parking on the street. Therefore, the proposed facility will not create conflicts with existing vehicular, bicycle, or pedestrian circulation.

Finding 5: If the project is located within the Chino Airport Influence Area, the proposed project is consistent with the most recently adopted version of the Chino Airport Land Use Compatibility Plan.

Evidence: The project is not located within the Chino Airport Influence Area, and thus not subject to the Chino Airport Land Use Compatibility Plan.

SECTION 4. DISGUISED WIRELESS FACILITY FINDINGS

Pursuant to Eastvale Zoning Code Section 4.14, the Planning Commission hereby finds and determines as follows:

Finding 1: The facility is designed and sited so as to be minimally visually intrusive.

Evidence: The proposed wireless facility, consisting of a 50-foot-high monopalm and ancillary ground-mounted equipment, is located at the rear of a large residential lot enclosed behind a 6-foot decorative block wall adjacent to the Santa Ana River. The proposed facility and the proposed 17-foot by 19-foot enclosed equipment area are not visible from the street or from the rear of adjacent residential or commercial properties. Photosimulations provided by the applicant indicate that the top of the disguised monopalm will be partially visible from the street due to the monopalm being screened by the existing residence and blending in with other similar palm trees nearby.

Finding 2: Ancillary equipment is located entirely within an equipment enclosure.

Evidence: The proposed equipment enclosure is a 6-foot-high split-faced block wall, and is located at the rear of the subject existing single-family residence, screening all equipment from public view.

Finding 3: The application has met all Zoning Code development standards.

Evidence: According to Section 4.14(A) of the Eastvale Zoning Code, Minor Development Review 15-1662 has met all applicable development standards (heights, setbacks, etc.) set forth.

Finding 4: The Planning Commission has determined: (1) that notice to the Federal Aviation Administration is not required; or, (2) received a determination of No Hazard to Air Navigation for the project issued by the Federal Aviation Administration.

Evidence: A letter provided by the applicant from the Federal Aviation Administration shows that the proposed monopalm is not located within the flight pattern of any nearby airports or private landing strips. Furthermore, the project is not subject to any additional Airport Land Use Commission reviews or determinations as the property is not located within any airport influence areas.

SECTION 5. PLANNING COMMISSION ACTION

Based upon the findings outlined in Sections 1 through 4 above, the Planning Commission of the City of Eastvale hereby takes the following actions:

1. Adopt Resolution No. 16-____ to approve a Categorical Exemption pursuant to Section 15303 of the California Environmental Quality Act for Minor Development Plan No. 15-1662; and

2. Adopt Resolution 16-____ to approve Minor Development Review No. 15-1662 for the installation of a new 50-foot-high wireless telecommunications facility disguised as a monopalm and associated equipment in a 17-foot by 19-foot lease area located at 8306 Grapewin Street (Assessor's Parcel Number 130-070-018) with an access easement on the adjacent parcel to the north (Assessor's Parcel Number 130-070-019) to service the facility, subject to conditions attached hereto as Exhibit A.

PASSED, APPROVED, AND ADOPTED this 18th day of May, 2016.

_____
Larry Oblea, Chair

APPROVED AS TO FORM:

_____
John E. Cavanaugh, City Attorney

ATTEST:

_____
Marc Donohue, Secretary

STATE OF CALIFORNIA)
COUNTY OF RIVERSIDE) §
CITY OF EASTVALE)

I, Marc Donohue, Secretary of the Planning Commission of the City of Eastvale, California, do hereby certify that the foregoing Planning Commission Resolution, No. 16-____, was duly adopted by the Planning Commission of the City of Eastvale, California, at a regular meeting thereof held on the 18th day of May, 2016, by the following vote, to wit:

AYES:

NOES:

ABSENT:

ABSTAIN:

_____
Marc Donohue, Secretary

EXHIBIT A

Conditions of Approval

CONDITIONS OF APPROVAL	
Project No. 15-1662 – Minor Development Review for the development of a new wireless telecommunication facility disguised as a monopalm with ancillary equipment to be located in a 17-foot by 19-foot lease area at the rear of an existing 2.55-acre residential property located at 8306 Grapewin Street with an access easement on the adjacent parcel to the north to service and maintain the facility.	
Assessor's Parcel Number: 130-070-018 and -019	
Approval Date:	

	Conditions of Approval	Timing/ Implementation	Enforcement/ Monitoring	Verification (Date and Signature)
General Conditions/Ongoing				
1.	In compliance with Section 15062 of the CEQA Guidelines, a Notice of Exemption (NOE) shall be filed with the Riverside County Clerk no later than five (5) days of project approval. The applicant shall submit to the Planning Department a check or money order made payable to the Riverside County Clerk in the amount of **$50.00** no later than **one day after approval.**	May 23, 2016	Planning Department	
2.	The applicant shall review and sign below verifying acceptance of these Conditions of Approval. This approval is not valid until signed and returned to the City. Applicant Signature Date	Ongoing	Planning Department	

	Conditions of Approval	Timing/ Implementation	Enforcement/ Monitoring	Verification (Date and Signature)
3.	The applicant shall indemnify, protect, defend, and hold harmless the City, and/or any of its officials, officers, employees, agents, departments, agencies, and instrumentalities thereof, from any and all claims, demands, lawsuits, writs of mandamus, and other actions and proceedings (whether legal, equitable, declaratory, administrative, or adjudicatory in nature), and alternative dispute resolution procedures (including, but not limited to, arbitrations, mediations, and other such procedures) (collectively "Actions"), brought against the City, and/or any of its officials, officers, employees, agents, departments, agencies, and instrumentalities thereof, that challenge, attack, or seek to modify, set aside, void, or annul any action of, or any permit or approval issued by, the City and/or any of its officials, officers, employees, agents, departments, agencies, and instrumentalities thereof (including actions approved by the voters of the City), for or concerning the project, whether such Actions are brought under the California Environmental Quality Act, the Planning and Zoning Law, the Subdivisions Map Act, Code of Civil Procedure Section 1085 or 1094.5, or any other state, federal, or local statute, law, ordinance, rule, regulation, or any decision of a court of competent jurisdiction. It is expressly agreed that the City shall have the right to approve, which approval will not be unreasonably withheld, the legal counsel providing the City's defense, and that applicant shall reimburse City for any costs and expenses directly and necessarily incurred by the City in the course of the defense. City shall promptly notify the applicant of any action brought and City shall cooperate with applicant in the defense of the action.	Ongoing	Planning Department	
4.	The subject properties shall be developed in a manner consistent with the Minor Development Plan 15-1662 as approved by the Planning Commission on May 18, 2016, as conditioned in these conditions of approval and as illustrated in the stamped, approved	Ongoing	Planning Department	

	Conditions of Approval	Timing/ Implementation	Enforcement/ Monitoring	Verification (Date and Signature)
	plans. Any modifications to the approved project shall be reviewed and approved pursuant to the Eastvale Zoning Code.			
5.	Any approval granted by the Planning Commission shall not be final until and unless the applicant's deposit account to cover the costs of application processing is made current and a positive balance of at least $2,000.00 is on hand to cover the costs of staff review and follow-up during the construction process.	Ongoing	Planning Department and Building Department	
6.	Applicant understands and agrees that failure to comply with all conditions of approval may result in the Planning Commission taking action resulting in modification of conditions of approval and/or suspension or revocation of any entitlement permits.	Ongoing	Code Enforcement	
7.	Applicant understands and agrees that the applicant is responsible for compliance with all federal, state and local laws regarding construction and environmental protection regardless of whether they are listed herein as conditions of approval.	Ongoing	Code Enforcement	
Prior to Issuance of Building Permit				
8.	The construction plan shall require that the block wall be coated with anti-graffiti treatment.	Prior to issuance of Building Permit	Planning Department and Building Department	
9.	The applicant shall provide revised elevation drawings, showing and noting that the microwave dish and all antennas on the monopalm shall be painted the same color as the monopalm pole. The elevation drawings shall also show that the palm fronds will fully screen all antennas.	Prior to issuance of Building Permit	Planning Department and Building Department	

	Conditions of Approval	Timing/ Implementation	Enforcement/ Monitoring	Verification (Date and Signature)
10.	The applicant shall provide a landscape and irrigation plan showing planting of new palm trees surrounding the facility and additional landscape surrounding the wall enclosures to the satisfaction of the Planning Director. All landscape and irrigation shall be installed per the approved landscape and irrigation plan prior to final Building Permit sign-off.	Prior to issuance of Building Permit	Planning Department and Building Department	
11.	The applicant shall provide revised site plan showing a minimum of 50 feet (100% of facility height) setback to all property lines and a minimum of 100 feet (200% of facility height) to all existing homes nearby the facility.	Prior to issuance of Building Permit	Planning Department and Building Department	
12.	The applicant shall provide a construction plan showing the installation of motion-sensor lighting on the facility to the satisfaction of the City. The lighting shall be shielded and directed downward so as to not impact nearby properties and wildlife in the Santa Ana River.	Prior to issuance of Building Permit	Police, Planning, and Building Departments	
Prior to Issuance of Grading Permit				
13.	Construction activities should be initiated outside of the primary nesting season for birds (April 1 - August 15). If construction must occur during the nesting season, a nesting bird survey shall be conducted within 3 days prior to commencing activities. If nesting birds are found in the Project footprint or adjacent areas if 500 feet from the project's footprint, project activities including manual clearing or heavy equipment use should not occur within a buffer zone established by a qualified biologist (150 feet standard, 250 feet in riparian areas, and 500 feet of raptor nests) until it is verified by the biologist that young have fledged or otherwise the nesting has completed.	Prior to issuance of Grading Permit	Public Works and Planning Departments	

	Conditions of Approval	Timing/ Implementation	Enforcement/ Monitoring	Verification (Date and Signature)
14.	If construction commencement is scheduled to occur during the known avian breeding season for *Vireo belli pusillus* (April 10 – August 31), a pre-construction survey for nesting birds shall be performed and submitted to the City for review and approval.	Prior to issuance of Grading Permit	Public Works and Planning Departments	
Fire Department				
Prior to the issuance of Building Permit, the applicant shall comply with all Fire Department standards requirements and conditions. 1. Provide a Knox box or padlock at the access gate. 2. Contractor shall post permanent signage in a conspicuous location at the site identifying whom should be called in an emergency, with phone numbers and site-identifying information (such as address, site#). 3. Provide a 2A-10BC fire extinguisher or equivalent. 4. Call for fire department inspection. 5. Provide specific fire department conditions on plans for building permit submittal.			

General Compliance Items

The following items are noted for the applicant's information. These items are required by the City, other local agencies, or state or federal agencies and are not conditions of approval of the project.

1. Certification of continued use of the wireless communications facility shall be submitted to the Planning Director on a yearly basis at the time of business license renewal for as long as the facility remains in operation. The certification shall indicate that the facility is operating as approved and that the facility complies with the most current Federal Communications Commission (FCC) safety standards. If the wireless communications facility is no longer in operation, it shall be removed within 90 days of discontinuance.

2. The applicant shall comply with all provisions and procedures of the Eastvale Building Department related to the plan check review process. (Please contact Tim Steenson, Chief Building Official, at 951-703-4451.)

3. The applicant shall pay all applicable Development Impact Fees and City Mitigation Fees as determined by the Building and Engineering Departments.

4. Every person conducting a business in the City of Eastvale shall obtain a business license. For more information regarding business registration, please visit the Business Registration information provided the City website (http://www.eastvalecity.org).

5. If human remains are encountered, State Health and Safety Code Section 7050.5 states that no further disturbance shall occur until the Riverside County Coroner has made the necessary findings as to origin. Further, pursuant to Public Resource Code Section 5097.98(b), remains shall be left in place and free from disturbance until a final decision as to the treatment and disposition has been made. If the Riverside County Coroner determines the remains to be Native American, the Native American Heritage Commission shall be contacted within a reasonable time frame. Subsequently, the Native American Heritage Commission shall identify the most likely descendant. The most likely descendant shall then make recommendations and engage in consultation concerning the treatment of the remains as provided in Public Resources Code Section 5097.98.

6. No obstruction shall be placed on any existing easement, unless an approval document from easement holder(s) is provided to the City.

7. No obstruction/improvement shall be made that blocks the existing drainage pattern. Any revision may require a grading plan.

ATTACHMENT 2

NOTICE OF EXEMPTION

CITY OF EASTVALE, CA
NOTICE OF EXEMPTION

TO BE SENT TO:

☑ County of Riverside County Clerk
P.O. Box 12004
Riverside, CA 92502

☐ Office of Planning and Research
P.O. Box 3044
Sacramento, CA 95812-3044

PROJECT CASE NO:	15-1662
PROJECT APPLICANT/SPONSOR:	Dail Richard; Verizon Wireless
PROJECT LOCATION:	8306 Grapewin Street, Corona, CA 92880
APN(s):	380-070-018
PROJECT DESCRIPTION:	Verizon proposes the installation of a new wireless telecommunications facility. The proposed project involves the installation of a new 50-foot disguised monopalm and a 323-square-foot, 6-foot-high equipment shelter.

The project or activity identified above is determined to be exempt from further environmental review requirements contained in the California Environmental Quality Act (CEQA).

EXEMPTION STATUS:

- Ministerial *(Sec. 21080(b)(1); Sec. 15268)*
- Declared Emergency *(Sec. 21080(b)(3); Sec. 15269(a))*
- Statutory Exemption
- ✓ Categorical Exemption *Section 15303(d)*
- Other:

REASONS TO SUPPORT EXEMPTION FINDINGS:

The proposed project will extend wireless telecommunication utilities. The proposed project will not result in damage to scenic resources including but not limited to trees, historic buildings, rock outcroppings, or similar resources within a highway officially designated as a state scenic highway. The proposed project is not located on a site which is included on any list compiled pursuant to Section 65962.5 of the Government Code and the project will not cause a substantial change in the significance of a historical resource. In consideration of this, staff has determined that the project satisfies the requirements of a Categorical Exemption pursuant to CEQA Section 15303(d), New Construction, and is determined to be exempt from further environmental review requirements contained in CEQA.

LEAD AGENCY CONTACT: **PHONE NUMBER:** (951) 703-4460

CITY OF EASTVALE PLANNING DEPARTMENT
Eric Norris, Planning Director

Signature_____Date_____

ATTACHMENT 3

COVERAGE BEFORE AND AFTER

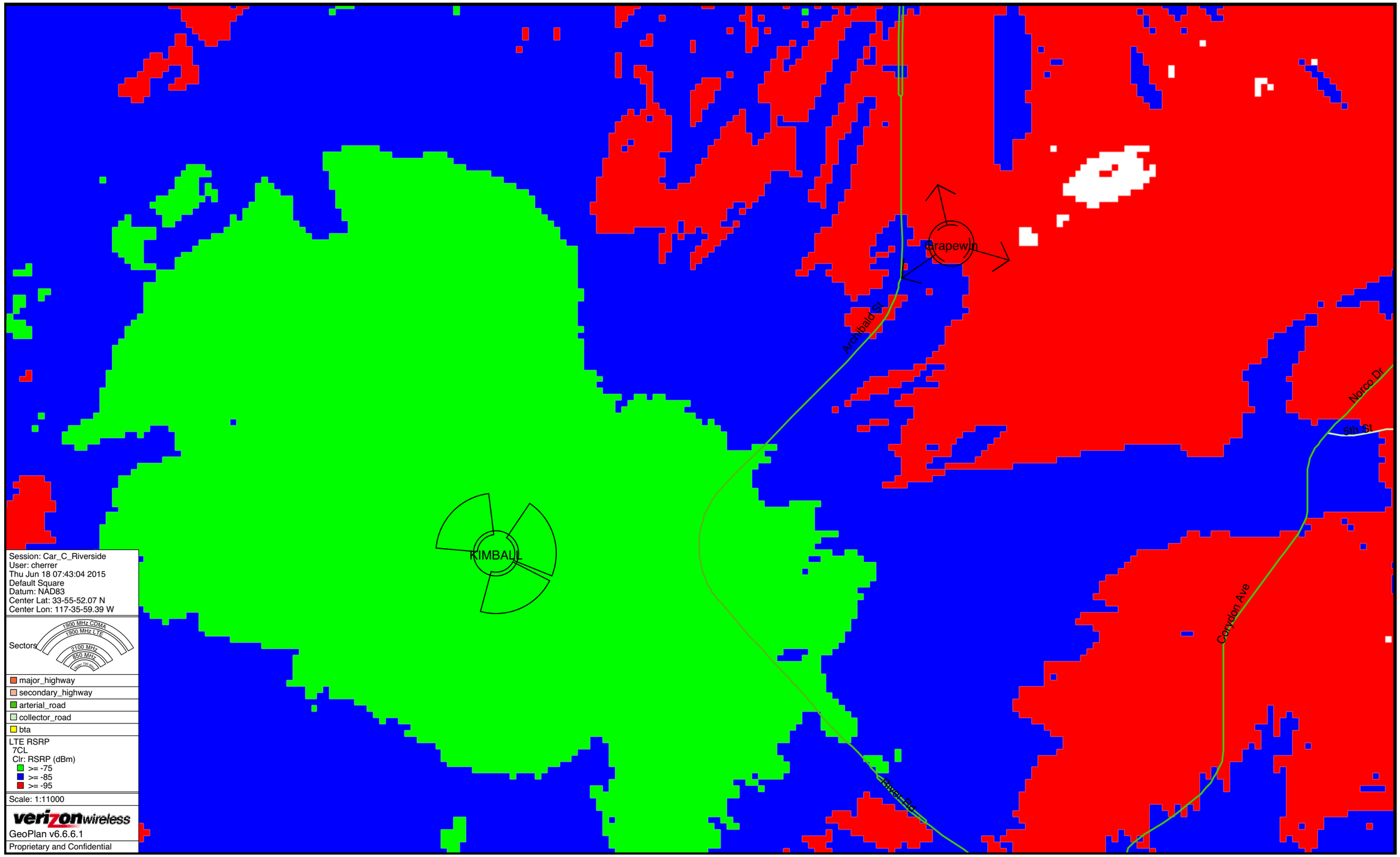
Grapewin
Archibald St
Norco Dr
5th St
KIMBALL
Corydon Ave
River Rd
Session: Car_C_Riverside
User: cherrer
Thu Jun 18 07:43:04 2015
Default Square
Datum: NAD83
Center Lat: 33-55-52.07 N
Center Lon: 117-35-59.39 W
Sectors
1900 MHz CDMA
1900 MHz LTE
2100 MHz
850 MHz
700/746 MHz
major_highway
secondary_highway
arterial_road
collector_road
bta
LTE RSRP
7CL
Clr: RSRP (dBm)
>= -75
>= -85
>= -95
Scale: 1:11000
verizonwireless
GeoPlan v6.6.6.1
Proprietary and Confidential

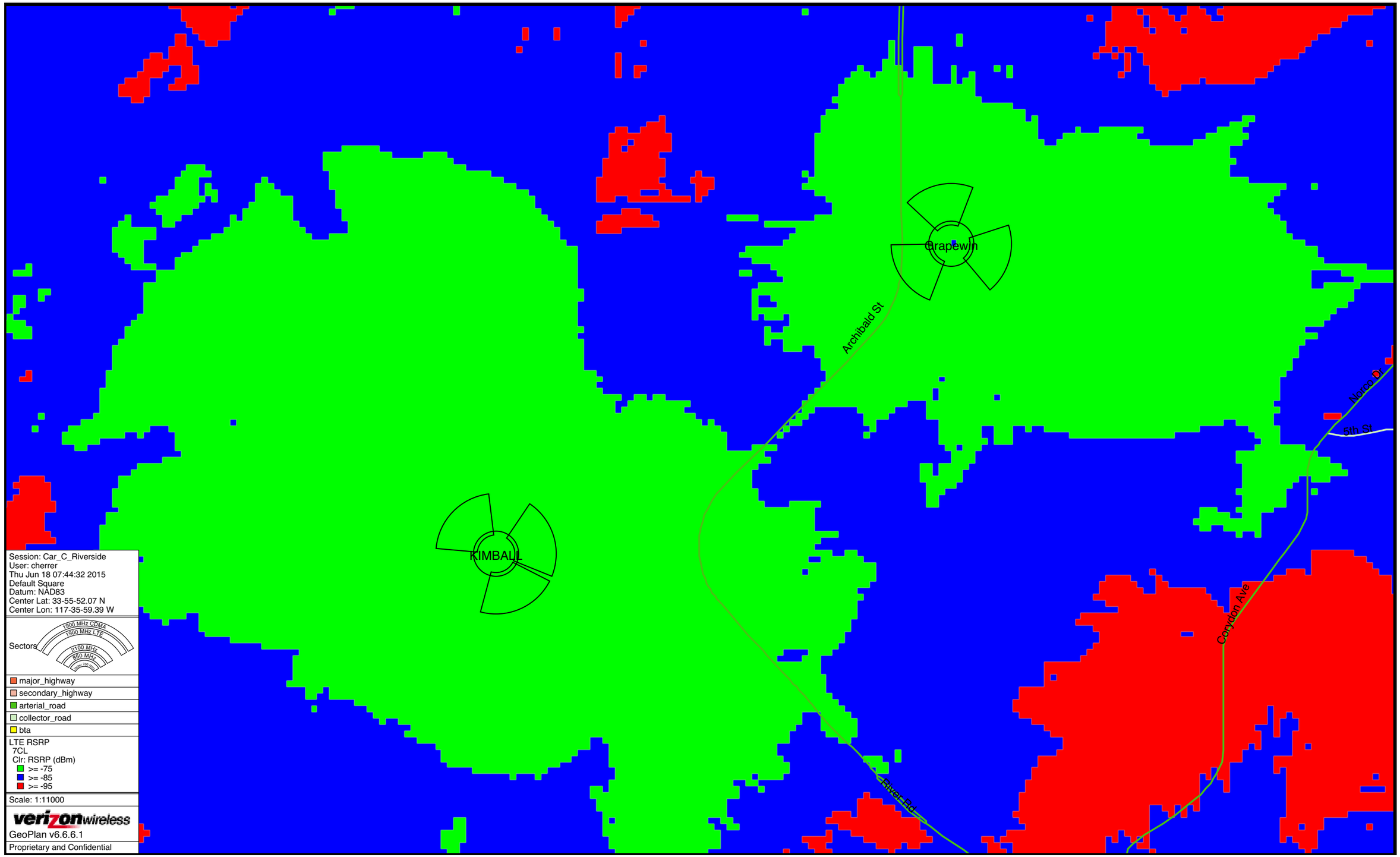
Grapevin
KIMBALL
Archibald St
Norco Dr
5th St
Corydon Ave
River Rd
Session: Car_C_Riverside
User: cherrer
Thu Jun 18 07:44:32 2015
Default Square
Datum: NAD83
Center Lat: 33-55-52.07 N
Center Lon: 117-35-59.39 W
Sectors
1900 MHz CDMA
1900 MHz LTE
2100 MHz
850 MHz
1900 / 700 MHz
major_highway
secondary_highway
arterial_road
collector_road
bta
LTE RSRP
7CL
Clr: RSRP (dBm)
>= -75
>= -85
>= -95
Scale: 1:11000
verizonwireless
GeoPlan v6.6.6.1
Proprietary and Confidential

ATTACHMENT 4

PUBLIC COMMENTS

Kanika Kith

From: Kanika Kith
Sent: Thursday, April 14, 2016 5:12 PM
To: 'Courtney Standridge'
Cc: Eric Norris; Cathy Perring; Marc Donohue; Malinda Lim
Subject: FW: Hearing Request

Courtney,

We received a request for a public hearing for the wireless facility on Grapewin. See email below. We will take this project to Planning Commission on May 18th.

Let me know if you have any questions.

Kanika Kith
Senior Planner
City of Eastvale
12363 Limonite Ave., Suite 910
Eastvale, CA 91752
www.EastvaleCA.gov
951.258-8300 Cell

Please note, City Hall is closed on Fridays

Facebook | Twitter | Instagram | LinkedIn | E-Notification

Community ~ Pride ~ Prosperity

From: Kanika Kith
Sent: Thursday, April 14, 2016 5:06 PM
To: 'McMullin, Sean' <SEANM@allstate.com>
Cc: 'heidimcmullin@gmail.com' <heidimcmullin@gmail.com>; 'Nazar@Providentrealestate.com' <Nazar@Providentrealestate.com>
Subject: RE: Hearing Request

Hi Sean,

Thank you for sending this request for a public hearing. We will schedule this for Planning Commission meeting on May 18th.

If you have any comments or questions, feel free to email them to me.

Thanks,

Kanika Kith
Senior Planner
City of Eastvale
12363 Limonite Ave., Suite 910
Eastvale, CA 91752
www.EastvaleCA.gov
951.258-8300 Cell

Please note, City Hall is closed on Fridays

Facebook | Twitter | Instagram | LinkedIn | E-Notification

Community ~ Pride ~ Prosperity

From: McMullin, Sean [mailto:SEANM@allstate.com]
Sent: Tuesday, April 12, 2016 10:48 AM
To: Kanika Kith <kkith@eastvaleca.gov>
Cc: heidimcmullin@gmail.com; Nazar@Providentrealestate.com
Subject: Hearing Request

Hi Kanika,

I would like to request a hearing on behalf of my wife, Heidi McMullin, regarding the minor development application for the installation of a new wireless telecommunications facility potentially located at 8306 Grapewin St. I am a resident of Eastvale. Let me know if you need me to do anything else. Thank you!

Sean McMullin
Agency Owner
Phone: 909-890-3559
Text & Fax: 909-890-9632
242 E. Airport Drive, Ste 203
San Bernardino, CA 92408

Allstate.

I can help protect the things that matter most.

My Website | Send Feedback | Contact Me

Kanika Kith

From: JimCSullivan@aol.com
Sent: Tuesday, April 19, 2016 4:43 PM
To: Kanika Kith
Cc: kurt@fec-electric.com; lylesmith50@att.net; jimcsullivan@aol.com
Subject: Request for Hearing on Minor Development Review Project No. 15-1662
Attachments: 160419 Eastvale Kurt.doc

Follow Up Flag: Follow up
Flag Status: Flagged

Ms Kanika Kith,

Thank you for your courtesy on the phone this afternoon, and attached is the letter requesting the Planning commission review and deny the application for this microwave tower site.

The neighbors will be in attendance at that hearing scheduled for May 18, and will have abundant information for the commissioners to review and make their decision with.

Please do contact me when you have the information requested earlier.

Thank you

Jim

Jim Sullivan
5102 Wisteria Dr
Oceanside, CA 92056

909-910-0520 cell JimCSullivan@aol.com -

Jim Sullivan
PrideMark
5102 Wisteria Dr
Oceanside Ca, 92056

Ms Kanika Kith
City of Eastvale Planning Department
12363 Limonite Avenue, Suite 910
Eastvale , CA 91752 April 18, 2016

Re: Request for a hearing on Minor Development Review Project No. 15-1662

Dear Ms

This letter is in opposition to the Project No 15-1662, and on behalf of Mr. & Mrs Kurt deStuben, 8230 Grapewin Street; and Mr. & Mrs Lyle Smith, 8222 Grapewin Street. These are the adjoining neighbors to the east of the proposed microwave tower.

We are requesting a hearing for this, and would like more information on project and any study done by the proponent regarding the affects of a tower on the health and environmental effects of the immediate, surrounding homes. Unfortunately, the project proponent has not made earlier contact with the residents in the vicinity of the proposed cell tower, and there are questions about the medical and health concerns of such a facility. Having been cancer survivors they do not wish to expose themselves to a risk factor that can be avoided. There are several points of reference indicating the need for studies of this kind of facility, noting that the The International Association of Fire Fighters' position on locating cell towers or commercial wireless infrastructure on fire department facilities is to oppose the use of fire stations as base stations for towers and/or antennas for the conduction of cell phone transmissions. This based on studies of adverse affects to Firemen in California. (reference https://www.iaff.org/HS/Facts/CellTowerFinal.asp)

It is our understanding that the City will hold a requested hearing on May 18, at 6 PM. Please confirm and we will be in attendance to provide the Planning Commission with both our concerns, and with the information that will allow for consideration of moving this tower to a more appropriate location.

We are looking forward to hearing from you soon.

Yours sincerely,

Jim

Jim Sullivan
5102 Wisteria Dr
Oceanside, CA 92056

909-910-0520 cell JimCSullivan@aol.com -

Confidentiality Note: This e-mail message and any attachments to it are intended only for the named recipients and may contain confidential information. If you are not one of the intended recipients, please do not duplicate or

forward this e-mail message and immediately delete it from your computer.

Please consider the environment before printing this e-mail

Jim Sullivan
PrideMark
5102 Wisteria Dr
Oceanside Ca, 92056
Ms Kanika Kith

City of Eastvale Planning Department
12363 Limonite Avenue, Suite 910
Eastvale , CA 91752

April 18, 2016

Ms Kanika Kith
City of Eastvale Planning Department
12363 Limonite Avenue, Suite 910
Eastvale , CA 91752

April 18, 2016

Re: Request for a hearing on Minor Development Review Project No. 15-1662

Dear Ms

This letter is in opposition to the Project No 15-1662, and on behalf of Mr. & Mrs Kurt deStuben, 8230 Grapewin Street; and Mr. & Mrs Lyle Smith, 8222 Grapewin Street. These are the adjoining neighbors to the east of the proposed microwave tower.

We are requesting a hearing for this, and would like more information on project and and any study done by the proponet regarding the affects of a tower on the health and environmental effects of the immediate, surrounding homes. Unfortunately, the project proponent has not made earlier contact with the residents in the vicenity of the proposed cell tower, and there are questions about the medical and health concerns of such a facility. Having been cancer survivors they do not wish to expose themselves to a risk factor that can be avoided. There are several points of reference indicating the need for studies of this kind of facility, noting that the The International Association of Fire Fighters' position on locating cell towers or commercial wireless infrastructure on fire department facilities is to oppose the use of fire stations as base stations for towers and/or antennas for the conduction of cell phone transmissions. This based on studies of adverse affects to Firemen in California. (reference https://www.iaff.org/HS/Facts/CellTowerFinal.asp)

It is our understanding that the City will hold a requested hearinpg on May 18, at 6 PM. Please confirm and we will be in attendance to provide the Planning Commission with both our concerns, and with the information that will allow for consideration of moving this tower to a more appropriate location.

We are looking forward to hearing from you soon.

Yours sincerely,

Kanika Kith

From: BMENG2000 <bmeng2000@aol.com>
Sent: Sunday, May 08, 2016 1:01 PM
To: Daniella McClister; Kanika Kith
Subject: Re: City of Eastvale, CA: PLANNING COMMISSION NOTICE OF PUBLIC HEARING PROJECT NO. 15-1662

Follow Up Flag: Follow up
Flag Status: Flagged

I would like to review the environmental and safety studies for this tower , please email me a link for these studies

Regards
Bashar Madani

Sent from my iPhone

On May 8, 2016, at 9:01 AM, City of Eastvale <info@eastvaleca.gov> wrote:

PLANNING COMMISSION NOTICE OF PUBLIC HEARING PROJECT NO. 15-1662

Post Date: 05/08/2016 9:00 AM

NOTICE IS HEREBY GIVEN that the City of Eastvale Planning Commission will hold a public hearing on **Wednesday, May 18, 2016**, at 6:00 p.m. at Rosa Parks Elementary School located at 13830 Whispering Hills Drive, Eastvale, CA 92880, to consider the proposed Minor Development Review application for the installation of a new wireless telecommunications facility that will be disguised as a 50-foot-high monopalm (artificial palm tree) and associated equipment in a 17-foot by 19-foot leased area behind an existing single-family home located at 8306 Grapewin Street, Corona, CA 92880 (Assessor's Parcel Number 130-070-018) with access via an easement on an adjacent parcel to the north (Assessor's Parcel Number 380-070-019) **– Project No. 15-1662**.

The associated equipment consists of 12 panel antennas, one microwave dish, two equipment cabinets, one generator, and associated apparatus surrounded by a proposed 6-foot-high textured split-face block wall enclosure. Maintenance personnel will visit the site every 4 to 6 weeks to ensure the equipment is functioning properly and to perform regular maintenance.

The applicant is Verizon Wireless, c/o Dail Richard. The project site is not located on a hazardous materials site listed under Government Code Section 65962.5. The project qualifies for a Class 3 Categorical Exemption pursuant to Section 15303, New Construction or Conversion of Small Structures, as exempt from further environmental review requirements contained in the California Environmental Quality Act (CEQA).

Any person may submit written comments prior to the public hearing or may appear in person before the Planning Commission to be heard. Written comments may be mailed to the City of Eastvale Planning Department located at 12363 Limonite Avenue, Suite 910, Eastvale, CA 91752.

Any questions on the project may be directed to Kanika Kith at (951) 258-8300 or via e-mail at kkith@eastvaleca.gov. All comments made in writing or via e-mail prior to the public hearing must be submitted and received by the City of Eastvale Planning Department no later than Wednesday, May 18, 2016, at 5:00 p.m. Oral and written comments may be submitted directly to the Planning Commission at the public hearing. If you challenge the project in court, you may be limited to raising only those issues you raised at the public hearing as described in this notice or in written correspondence delivered to the Eastvale Planning Commission prior to or at the public hearing.

Having trouble viewing this email? View on the website instead.

Change your eNotification preference.

Unsubscribe from all City of Eastvale, CA eNotifications.

Kanika Kith

From: BMENG2000@aol.com
Sent: Tuesday, May 10, 2016 4:57 PM
To: Daniella McClister; Kanika Kith
Subject: RE: City of Eastvale, CA: PLANNING COMMISSION NOTICE OF PUBLIC HEARING PROJECT NO. 15-1662

Dear Kanika
Please consider this email as an objection to this project , there are many concerns that need to be addressed properly on this project .

1. The timing of the letter provides a very short notice to residents around this area, leave them with 8 days to comment on such development.
2. Is there any study been made to comply with city of Eastvale code -chapter 120.05 in regards to height limitation from residents?
3. Is there any study been made to comply with the aircraft zone and FAA, is this tower will create any issue to flights at corona airport and eventfully increasing possibility for flight accidents in this area?
4. Is there any study been performed for the electromagnetic frequency (EMF) expected to come from tower and the health impact associated with such waves, what is the current EMF and what is excepted to be? Is the new value safe? Please see attached link for related study http://www.prisonplanet.com/new-study-links-over-7000-cancer-deaths-to-cell-phone-tower-radiation-exposures.html
5. Is the legal impact associated with this tower if approved and caused a health issue been reviewed by the city, who will pay for a class action if a residents claim cancer or health related problem from this tower?

Thanks
Bashar Madani
From: City of Eastvale [mailto:info@eastvaleca.gov]
Sent: Sunday, May 8, 2016 9:01 AM
To: bmeng2000@aol.com
Subject: City of Eastvale, CA: PLANNING COMMISSION NOTICE OF PUBLIC HEARING PROJECT NO. 15-1662

PLANNING COMMISSION NOTICE OF PUBLIC HEARING PROJECT NO. 15-1662

Post Date: 05/08/2016 9:00 AM

NOTICE IS HEREBY GIVEN that the City of Eastvale Planning Commission will hold a public hearing on **Wednesday, May 18, 2016**, at 6:00 p.m. at Rosa Parks Elementary School located at 13830 Whispering Hills Drive, Eastvale, CA 92880, to consider the proposed Minor Development Review application for the installation of a new wireless telecommunications facility that will be disguised as a 50-foot-high monopalm (artificial palm tree) and associated equipment in a 17-foot by 19-foot leased area behind an existing single-family home located at 8306 Grapewin Street, Corona, CA 92880 (Assessor's Parcel Number 130-070-018) with access via an easement on an adjacent parcel to the north (Assessor's Parcel Number 380-070-019) **– Project No. 15-1662**.

The associated equipment consists of 12 panel antennas, one microwave dish, two equipment cabinets, one generator, and associated apparatus surrounded by a proposed 6-foot-high textured split-face block wall enclosure. Maintenance personnel will visit the site every 4 to 6 weeks to ensure the equipment is functioning properly and to perform regular maintenance.

The applicant is Verizon Wireless, c/o Dail Richard. The project site is not located on a hazardous materials site listed under Government Code Section 65962.5. The project qualifies for a Class 3 Categorical Exemption pursuant to Section 15303, New Construction or Conversion of Small Structures, as exempt from further environmental review requirements contained in the California Environmental Quality Act (CEQA).

Any person may submit written comments prior to the public hearing or may appear in person before the Planning Commission to be heard. Written comments may be mailed to the City of Eastvale Planning Department located at 12363 Limonite Avenue, Suite 910, Eastvale, CA 91752. Any questions on the project may be directed to Kanika Kith at (951) 258-8300 or via e-mail at kkith@eastvaleca.gov. All comments made in writing or via e-mail prior to the public hearing must be submitted and received by the City of Eastvale Planning Department no later than Wednesday, May 18, 2016, at 5:00 p.m. Oral and written comments may be submitted directly to the Planning Commission at the public hearing. If you challenge the project in court, you may be limited to raising only those issues you raised at the public hearing as described in this notice or in written correspondence delivered to the Eastvale Planning Commission prior to or at the public hearing.

Having trouble viewing this email? View on the website instead.

Change your eNotification preference.

Unsubscribe from all City of Eastvale, CA eNotifications.

ATTACHMENT 5

600-FT RADIUS MAP

T:_GIS\Riverside_County\MXDs\Eastvale\Grapewin_Verizon\600ft radius map.mxd (5/11/2016)

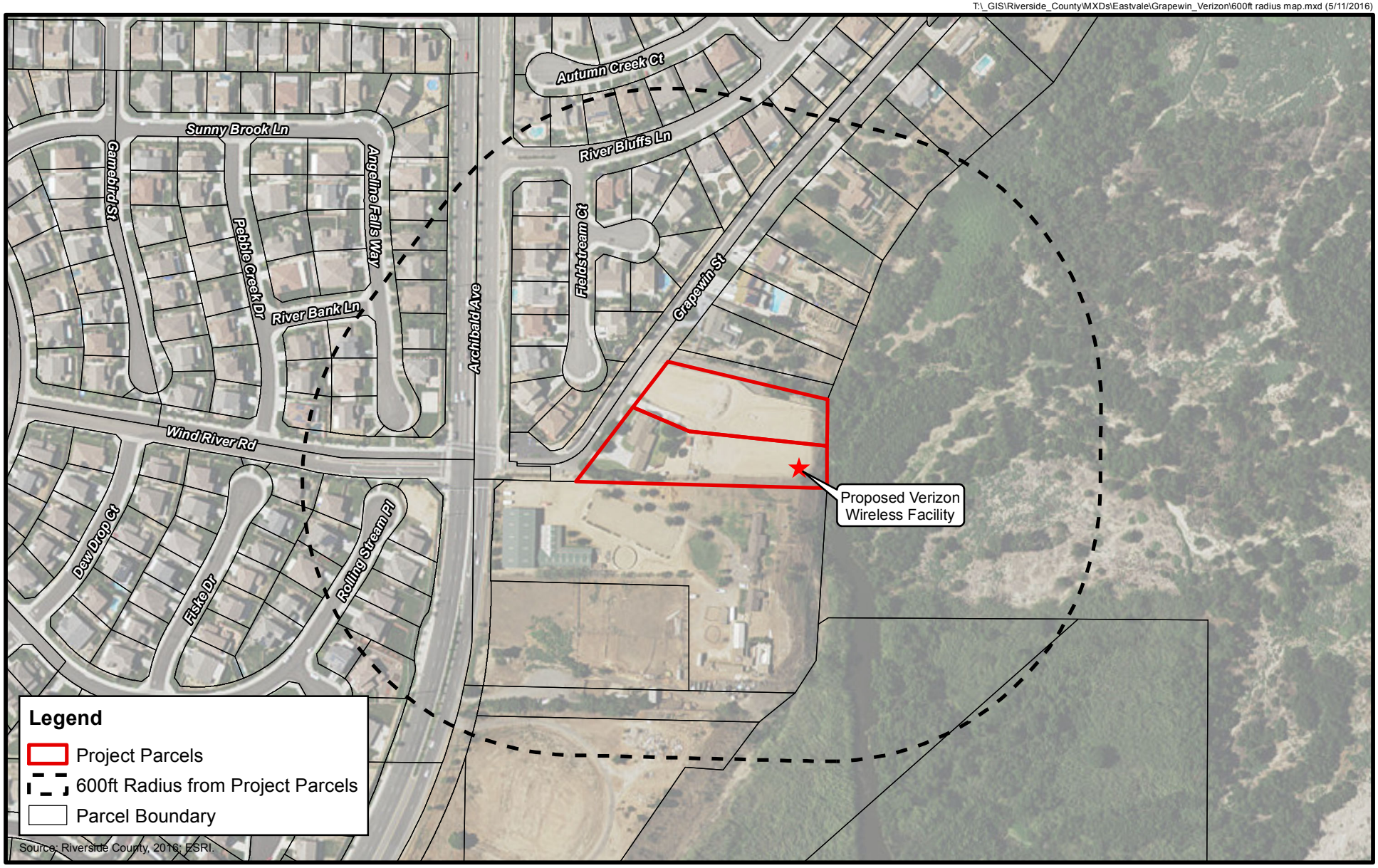

0 150 300
FEET

FIGURE 1
600ft Radius from Project Parcels

Michael Baker
INTERNATIONAL

ATTACHMENT 6

FAA LETTER

```
*****************************************************
*            Federal Airways & Airspace             *
*         Summary Report: New Construction          *
*                 Antenna Structure                 *
*****************************************************

Airspace User: Not Identified

File: GRAPEWIN

Location:  Norco, CA

Latitude:  33°-56'-14.4"         Longitude: 117°-35'-26.57"

SITE ELEVATION AMSL......577 ft.
STRUCTURE HEIGHT.........50 ft.
OVERALL HEIGHT AMSL......627 ft.

NOTICE CRITERIA
  FAR 77.9(a): NNR (DNE 200 ft AGL)
  FAR 77.9(b): NNR (DNE Notice Slope)
  FAR 77.9(c): NNR (Not a Traverse Way)
  FAR 77.9:    NNR FAR 77.9 IFR Straight-In Notice Criteria for AJO
  FAR 77.9:    NNR FAR 77.9 IFR Straight-In Notice Criteria for CNO
  FAR 77.9(d): NNR (Off Airport Construction)

  NR  = Notice Required
  NNR = Notice Not Required
  PNR = Possible Notice Required (depends upon actual IFR procedure)
        For new construction review Air Navigation Facilities at bottom
        of this report.

  Notice to the FAA is not required at the analyzed location and height for
  slope, height or Straight-In procedures. Please review the 'Air Navigation'
  section for notice requirements for offset IFR procedures and EMI.


OBSTRUCTION STANDARDS
  FAR 77.17(a)(1): DNE 499 ft AGL
  FAR 77.17(a)(2): DNE - Airport Surface
  FAR 77.19(a): DNE - Horizontal Surface
  FAR 77.19(b): DNE - Conical Surface
  FAR 77.19(c): DNE - Primary Surface
  FAR 77.19(d): DNE - Approach Surface
  FAR 77.19(e): DNE - Transitional Surface

VFR TRAFFIC PATTERN AIRSPACE FOR: AJO: CORONA MUNI
Type: A   RD: 14543.68   RE: 533
  FAR 77.17(a)(1):        DNE
  FAR 77.17(a)(2):        Does Not Apply.
  VFR Horizontal Surface: DNE
  VFR Conical Surface:    DNE
  VFR Approach Slope:     DNE
  VFR Transitional Slope: DNE

VFR TRAFFIC PATTERN AIRSPACE FOR: CNO: CHINO
Type: A   RD: 16580.33   RE: 636.5
  FAR 77.17(a)(1):        DNE
  FAR 77.17(a)(2):        DNE - Height No Greater Than 200 feet AGL.
  VFR Horizontal Surface: DNE
  VFR Conical Surface:    DNE
  VFR Approach Slope:     DNE
  VFR Transitional Slope: DNE

  The structure is within VFR - Traffic Pattern Airspace Climb/Descent Area.
  Structures exceeding the greater of 350' AAE, 77.17(a)(2), or VFR horizontal
  and conical surfaces will receive a hazard determination from the FAA.
  Maximum AMSL of Climb/Descent Area is 1000 feet.

TERPS DEPARTURE PROCEDURE (FAA Order 8260.3, Volume 4)
  FAR 77.17(a)(3) Departure Surface Criteria (40:1)
  DNE Departure Surface
```

MINIMUM OBSTACLE CLEARANCE ALTITUDE (MOCA)
FAR 77.17(a)(4) MOCA Altitude Enroute Criteria
The Maximum Height Permitted is 2000 ft AMSL

PRIVATE LANDING FACILITIES
No Private Landing Facilites Are Within 6 NM

AIR NAVIGATION ELECTRONIC FACILITIES

FAC IDNT	TYPE	ST AT	FREQ	VECTOR	DIST (ft)	DELTA ELEVA	ST	LOCATION	GRND ANGLE	APCH BEAR
AJO	CO	Y	132.17	187.9	15409	+30	CA	CORONA RCO	.11	
PDZ	VORTAC	R	112.2	110.58	19681	-805	CA	PARADISE	-2.34	
CNO	ATCT	ON	A/G	317.19	20328	-82	CA	CHINO	-.23	
CNO	LOCALIZER	I	111.5	307.97	22695	+10	CA	RWY 26R CHINO	.03	255
ONT	RADAR	Y	2717.	358.5	41924	-347	CA	ONTARIO INTL	-.47	

No Impact. This structure does not require Notice based upon EMI.
The studied location is within 20 NM of a Radar facility.
The calculated Radar Line-Of-Sight (LOS) distance is: 69 NM.
This location and height is within the Radar Line-Of-Sight.

RAL	VOR	I	112.4	81.33	43226	-151	CA	RIVERSIDE	-.2	

Alert! IFR Notice is not Required for this structure.
Predict within Final Segment of Approach plus Fix Error Area. Predict within FAR 77.9 IFR Notice Requirement Area for RAL: VOR RWY 09
The maximum IFR No Notice Height for new construction is: 1650' AMSL.

SOX	RADAR WXL	ON		197.49	45671	-2479	CA	ORANGE CTY/88D	-3.11	
POM	VORTAC	R	110.4	310.83	78580	-639	CA	POMONA	-.47	
SB	NDB	I	39	57.45	80708	-345	CA	PETIS	-.24	
SBD	NDB	I		57.45	80708	-345	CA	RWY 06 SAN BERNAR	-.24	
RIV	TACAN	R	NA	96.78	96431	-916	CA	MARCH	-.54	
ELB	VOR/DME	R	117.2	204.12	104211	+291	CA	EL TORO	.16	
LGB	RADAR	ON	2730.	246.91	135700	+515	CA	LONG BEACH /DAUGH	.22	
HDF	VOR	R	113.4	115.57	136323	-787	CA	HOMELAND	-.33	
SLI	VORTAC	R	115.7	248.17	151625	+604	CA	SEAL BEACH	.23	
QLA	RADAR ARSR	Y	1277.4	252.69	236875	-920	CA	Los Angeles San P	-.22	

CFR Title 47, §1.30000-§1.30004
AM STUDY NOT REQUIRED: Structure is not near a FCC licensed AM station.
Movement Method Proof as specified in §73.151(c) is not required.
Please review 'AM Station Report' for details.

Nearest AM Station: KLAA @ 2587 meters.

Airspace® Summary Version 15.7.400

AIRSPACE® and TERPS® are registered ® trademarks of Federal Airways & Airspace®
Copyright © 1989 - 2015

10-21-2015
17:55:41

ATTACHMENT 7

BIOLOGICAL ASSESMENT REPORT

COMMENTS RESPONSE
v.1 - Feb 2016

February 22, 2016

Biological Assessment Report

for Proposed Monopalm on Residential Property

@

8306 Grapewin St. Eastvale, CA 92880

APN: 130-070-018 & 130-070-019

MDR Project #: 15-1662

CITY OF EASTVALE
PLANNING DEPARTMENT
C/O: Kanika Kith, Senior Planner
12363 Limonite Avenue, Suite #910
Eastvale, CA 91752
PH# (951) 361-0900
FX# (951) 361-0888
www.EastvaleCA.gov

Prepared For:

TRILEAF Environmental & Property Consultants
C/O Patricia Rees
2121 W. Chandler Blvd., Suite 203
Chandler, AZ 85224
Office: (480) 850-0570
Fax: (480) 850-0578
trileaf.com
&
Verizon Wireless, Inc.
C/O Dail Richard
5865 Avenida Encinas, Suite 142 B
Carlsbad, CA 92008

Prepared By:

ARCHON Consulting Co.
Justin Daniel, CEO, Senior Biologist
6852 Lake Ct
San Diego, CA 92111
Main # 951 271 6511
calarchon@gmail.com

02/22/16

Biological Consultant
Justin Daniel

DECEMBER 2015
revised FEBRUARY 2016 v 1.1

PAGE INTENTIONALLY LEFT BLANK

FEBRUARY 2016

TABLE OF CONTENTS

CHAPTER 1.0 INTRODUCTION

1.1 Project Property Location
1.2 Project Property Description
1.3 Proposed Project Description

CHAPTER 2.0 METHODOLOGY

2.1 General Habitat Assessment
2.1.1 Literature Review
2.1.2 Jurisdictional Waters, Riparian/Riverine, Wetlands & Vernal Pools
2.1.3 General Biological Resources Field Survey

CHAPTER 3.0 EXISTING CONDITIONS

3.1 Topography and Soils
3.2 General Hydrology
3.3 Vegetative Communities
3.3.1 Residential / Urban / Exotic: Landscaping [0.24 Ac]
3.3.2 Residential / Urban / Exotic: Denuded Pastureland (Disturbed) [1.60 Ac]
3.3.3 Residential / Urban / Exotic: Developed [0.62 Ac]
3.3.4 Southern Riparian Willow Scrub: Black Willow Series (Disturbed)[0.09 Ac]
3.3.5 Southern Cottonwood - Willow Riparian Forest: Fremont Cottonwood Series [Not on Property]
3.3.6 Open Water [Not on Property]
3.3.7 Residential / Urban / Exotic: Fallow Pastureland [Not on Property]
(Disturbed) Co-dominant *Amaranthus – Brassica* Alliance
3.4 Jurisdictional Waters
3.5 Wetlands & Vernal Pools
3.6 Nesting Birds

CHAPTER 4.0 RESULTS & FINDINGS

4.1 MSHCP Referenced Species
4.1.1 Urban / Wildlands Interface Guidelines
4.1.2 Criteria Area Species with Additional Survey Needs and Procedures
4.2 Sensitive Habitats
4.2.1 Riparian / Riverine Habitat
4.3 California Species of Special Concern
4.4 California Rare Plants
TABLE 1: SPECIAL STATUS PLANT SPECIES
TABLE 2: SPECIAL STATUS WILDLIFE SPECIES
4.5 Listed species with a potential to occur
Least bell's vireo (*Vireo bellii pusillus*)
Southwestern willow flycatcher (*Empidonax traillii extimus*)
Western yellow-billed cuckoo (*Coccyzus americanus occidentalis*)

TABLE OF CONTENTS
(Continued)

CHAPTER 5.0 ISSUES, CONSIDERATIONS & MEASURES
- **5.1 Urban / Wildlands Interface Guidelines**
- **5.2 Fee Compliance**
- **5.2 Criteria Area Species (MSHCP Section 6.1.3)**

CHAPTER 6.0 SUMMARY / CONCLUSION

CHAPTER 7.0 CERTIFICATION

REFERENCES

APPENDIX A VASCULAR PLANT LIST
APPENDIX B WILDLIFE LIST
APPENDIX C SITE PHOTOGRAPHS
APPENDIX D SUPPLEMENTAL ATTACHMENTS

FIGURE # 01 Local & USGS Map – CORONA NORTH (1981) (T3S R7W S2)
FIGURE # 02 Aerial Imagery w/ Soils & Property Info Overlay
FIGURE # 03 Vegetation Communities within 50' Survey Area
FIGURE # 04 Proposed Project Plan & Topography

CHAPTER 1.0 INTRODUCTION

The purpose of this Biological (Habitat Suitability) Assessment Report (BAR) is to summarize the biological data gathered in regards to a Monopalm cellular tower and affiliate facilities proposed to be constructed on a residential Property within the City of Eastvale, Riverside County, California. This report analyzes consistency of the proposed Project with the goals and objectives of the California Environmental Quality Act (CEQA), current edition, the City of Eastvale environmental standards that are based on, in part or whole, the Western Riverside County Multiple Species Habitat Conservation Plan (MSHCP, 2003). The Eastvale Area Plan, a part of the WRMSCHP, shall be used as a basis for analyzing potential occurrence of sensitive biological resources, as well as all current pertaining records and standards compiled by the California Department of Fish and Wildlife (CDFW).

The proposed Project consists of construction of an unmanned wireless cell site for Verizon Wireless, Inc., which includes a 323 sqft lease area where the cell tower and CMU perimeter compound are proposed. Also included are an unpaved 20' wide access easement, unpaved technician parking space and underground utility connections. The proposed Project parcels (Property) are located within the City of Eastvale, on two parcels totaling together 2.55 acres identified by APNs 130-070-018 (south parcel) and 130-070-019 (north parcel).

This report shall address biological resources and habitat assessment determinations for potential Riparian / Riverine Resources and Vernal Pool Species, Narrow Endemic Plant Species (NEPS), Criteria Area Species (CAS), and also California Species of Special Concern (CSSC) as listed by the CDFW. In addition, Urban / Wildlands Interface Guidelines (UWIG) that may pertain shall be addressed. Finally, this report shall offer potential mitigation responsibilities as conditions of approval, where they apply. Biological resources are listed and addressed below.

1.1 Project Property Location

The 2.55 Acre Property is located within the City of Eastvale, an incorporated city within North-western Riverside County, California. (Figure 01: Local Map & USGS map) The City of Eastvale lies adjacent to the City of Norco, CA which lies to the NorthWest, separated by the Santa Ana River. Eastvale also is neighbored by the City of Jurupa Valley to the East, the City of Corona to the South and within nearby San Bernardino County: the City of Chino to the West and the City of Ontario to the North.

The address for the Property is 8306 Grapewin St., Eastvale CA 92880, directly accessible from Archibald Ave.

The Property parcels are located within the Low Density Residential (LDR) land use under the 2015 Eastvale General Plan. Both parcels are zoned under A-1, allowing light agricultural land use. Surrounding land uses are other LDR lots, medium density residential (MDR) planned communities, and conservation lands within the Prado Flood Control Basin / Santa Ana River.

The Property's western-most property corner has coordinates Lat: 33° 56' 13.91”N Long: 117° 35' 32.36” W (33.9372', -117.5923') under the NAD 83 geodetic reference system. Situated within the U.S. Geological Survey (USGS) 7.5 minute Corona North Quadrangle map, the Property is located within Township 3 South, Range 7 West, Section 2 (T3S R7W S2) (Figure 01: Local Map & USGS map).

In terms of physical geography, the Property lies near the bottom of the wide inland Pomona Valley in the Inland Empire, directly adjacent to the Santa Ana River (River) which joins the Prado Flood Control Basin just upstream from the rear of the Property. The Santa Ana River is a primary watercourse and a major watershed for Southern California. Major geographic features in the vicinity are the confluence of the Santa Ana River and Temescal Creek 2.83 miles to the Southwest and Prado Dam, approximately 4.35 miles to the Southwest. Artificially created Lake Norconian lies 1.40 miles to the east across the River at the Naval Weapons Station: Corona Division. The Chino Hills lie to the West, approximately 4.02 miles away. The Norco Ridge hills lies approximately 3.55 miles to the east.

1.2 Project Property Description

The 2.55 acres of Property are similar between both parcels in that they are primarily denuded, unused pastureland, with the exception that the south parcel has an existing residence with surrounding landscaped yards. At one time, the Property held a small herd of cattle and grew various feed grasses. Now, the earth is mostly bare with small patches of introduced species that colonize highly disturbed lands. A small patch of riparian scrub is found within the easement area at a drainage pipe outflow that sheds local storm water to the River. (Reference Figure 02: Aerial Imagery)

The residence and garage cover 3323 sqft of area, with surrounding paved driveway, fencing / security and landscaping in the front yard and rear. In the back yard of the residence, a decorative CMU wall separates the landscaped area from the remainder of the parcel, where corral fencing and metal poles delineate pasture areas and property lines. The primary access to the Property is through a gated entry point to the north of the house connecting directly to Grapewin St. Another access gate connects to Grapewin St immediately adjacent to the residence and is paved. The north parcel is fenced in by a chain-link fence and CMU wall that separates the Property from an easement used for an underground storm drain and storm water outlet. This storm water easement is part of the local MS4 and empties into the Santa Ana River via a rocky basin diffuser. Near the eastern edge of the Property, corral fencing is setback from the embankment for the River. This embankment dives sharply down to the flood plain below, just beyond the eastern Property lines. Topography and site features are shown per included map. (Reference Figure 04: Project Plan & Topography.)

One native vegetation community can be found on the Property: Southern willow riparian scrub. The disturbed areas of pastureland and developed pasture do not show a distinctive cover of native plants and very few examples of native floral species were observed there. Both of these disturbed communities fall under the Developed / Disturbed designation and Residential / Urban / Landscaping under the WRMSHCP. While the Disturbed areas can not be classified vegetation communities of state ranked value, the Southern willow riparian scrub is ranked and is considered sensitive and important for ecological diversity in the region. (Figure 03: Vegetation Communities)

Using the surrounding character of the community and River for comparison, the Property was once likely upland riparian scrub and upland coastal sage scrub with intermixed grasslands. The Prado basin flood plain and Chino hills still contain examples of these habitats. As the Santa Ana River courses through the valley, the Property was likely once a dynamic geologic system of alternating banks and terraces that silted and compacted to form a distinctive hydrologic boundary from the Santa Ana River flood plain.

1.3 Proposed Project Description

The proposed Project entails the construction of 50'-0" High Stealth Monopalm Tower structure bound in a 323 sqft lease area of 17' x 19' with a 6' perimeter CMU wall and a proposed 20' wide easement to provide access and utility connections. Included on the Monopalm shall be (12) panel antennas and (12) RRU's on sector frames, (2) raycap boxes on sector frames, (1) 4' microwave dish, (2) GPS antennas mounted on cabinets, (1) standby generator, (2) MCE equipment cabinets on concrete pad within the lease area, pull boxes as needed, (1) parking space for maintenance techs and underground utility line connections for power and cable connecting to services at Grapewin St. The lease area shall be located near the eastern Property line fully within APN 130-070-018, set back from the River embankment to avoid placing any footprint within the riparian zone. (See Figure 04: Proposed Project Plan)

Cellular towers create and enhance the network of mobile data and phone service, used by governmental organizations, businesses and private customers alike for modern telecommunications. They are typically placed on hills or within open plains that have an uninterrupted and direct visual line to other towers and the areas in which they provide service. This particular tower utilizes permanent and secure decorative features to mimic a palm tree so as to diminish impacts on visual resources. Cellular towers in general are unmanned, excepting when technicians are present to upgrade the facility or to provide maintenance / repairs. They produce little to no environmental noise and do not produce effluents, chemicals, or generally complicate water runoff. On the tower, red low voltage lights are generally placed at the top for nighttime hazard warning, if they are required, to comply with Federal Aviation Administration regulations. Otherwise, the only lighting is placed within the walled enclosure to provide security and safety illumination and are set for switched activation only.

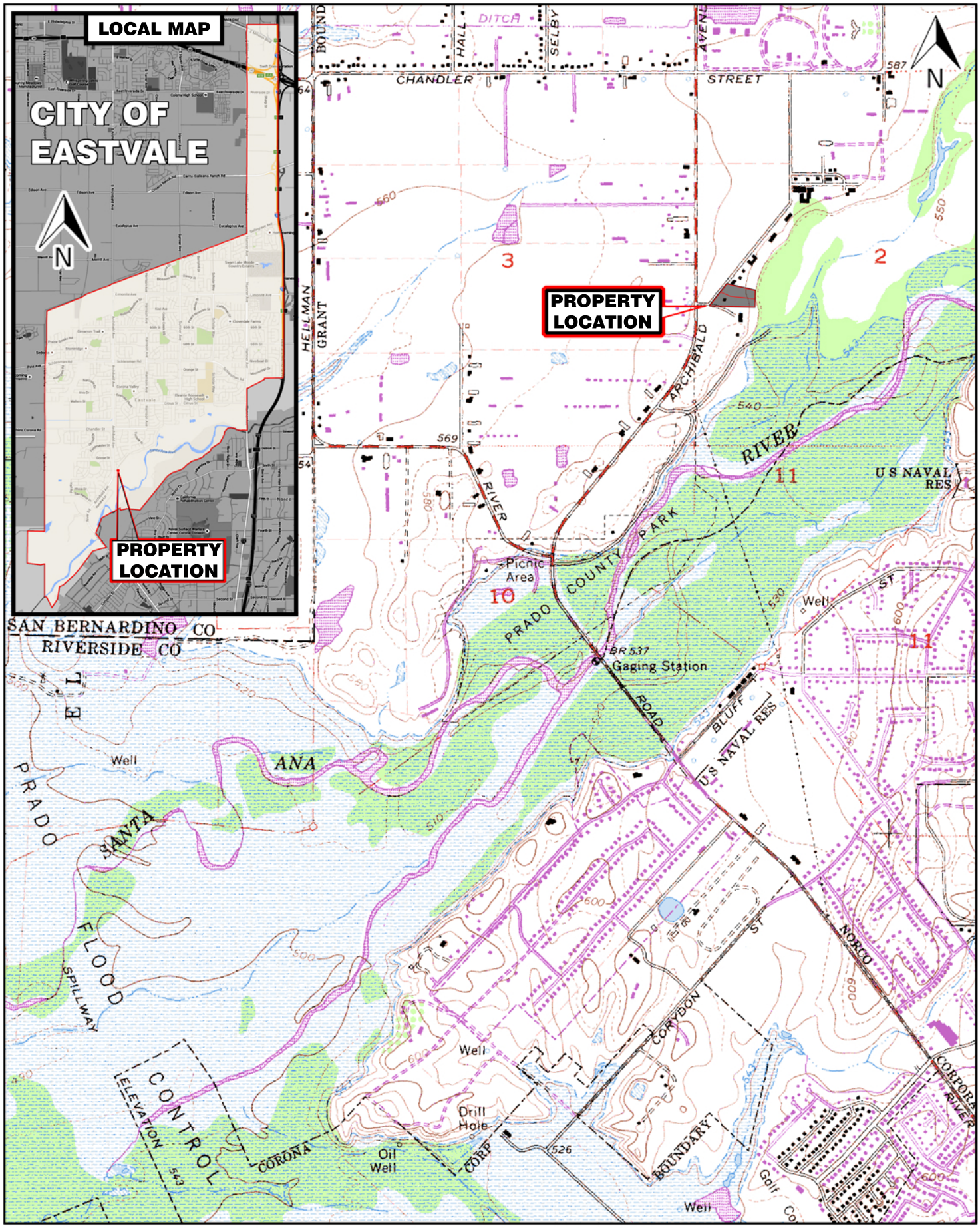

LOCAL & USGS MAP - CORONA NORTH QUAD (1981) (T3S R7W S2)

0 1000 2000 3000 4000 5000

VERIZON WIRELESS
GRAPEWIN MONOPALM #T143451
BIOLOGICAL ASSESSMENT REPORT

FIGURE 01

ARCHON CONSULTING

SOURCE: USGS 7.5' SERIES - CORONA NORTH QUAD (1981), RIVERSIDE COUNTY, CA

Ch. 2.0 METHODOLOGY

2.1 General Habitat Assessment

2.1.1 Literature Review

Prior to the field visit, a literature review was conducted to evaluate known environmental conditions on and around the Property. The literature included: U.S. Department of Agriculture Soil Survey (1971) and Web Soil Survey Online for geological surface conditions; Riverside County Parcel Report vis a vis Riverside County Transportation and Land Management Agency (RCTLMA) online portals; and Riverside County Assessor's Property Information Center online application (RCIT - Map My County software), the City of Eastvale General Plan and US Geologic Survey (USGS) database. Information reviews were used to determine parcel legal status, known conditions on site, and departmental designations in regards to environmental status and land use.

In addition, the WRMSHCP was reviewed to determine survey protocols and descriptions of habitat conditions known within the County of Riverside and specifically within the Eastvale Area Plan portion of the WRMSHCP. Geographical Information Systems (GIS) data software and publicly available maps were used to map the site, especially in relation to any criteria areas, conservation areas, and defined wildlife corridors and linkages. Also accessed were all available study area maps for known sensitive, rare, or otherwise protected plant, bird, mammal, reptile and amphibian species. The California Natural Diversity Database [CNDDB] (California Department of Fish and Wildlife [CDFW December 2015]), Rarefind Online application, the California Native Plant Society (CNPS) Electronic Inventory (CNPS 2015), and the Cal Flora Database (CalFlora 2015) were consulted in relation to a 5-mile radius about the Property to determine proximity of locally known flora and fauna of any ranked status. Citations and referenced materials are listed within the appendices of this report.

This biological assessment report aims, in particular, to determine the if any potentially significant effects stemming from the proposed project might affect Riparian / Riverine and/or vernal pool resources. Documentation for the assessment includes mapping and a description of the function and values of the mapped areas with respect to species listed in the WRMSHCP Section 6.1.2 in addition to those listed in the Eastvale Area Plan. Finally, review was required to establish the applicability of any California Environmental Quality Act (CEQA) biological resource requirements that pertain to the proposed Project.

2.1.2 Jurisdictional Waters, Riparian/Riverine, Wetlands & Vernal Pools

A precursory review to determine the presence of jurisdictional waters, riparian / riverine, and wetlands areas, including vernal pool habitat, was conducted. Riparian / Riverine habitat is determined initially by a reference to USGS map(s) that show known drainage lines in blue, and may be confirmed by vegetation community composition and other geologic and hydrological features during surveys. Jurisdictional waters are defined and attributed by the U.S. Army Corps of Engineers (ACE) and/or the U.S. Environmental Protection Agency (EPA). CEQA guidelines provide authority of the designation to ACE under the Clean Water Act 33 U.S.C. §1251 et seq. (1972) (CWA), which generally require Section 404 permits for any Projects affecting designated jurisdictional waters. Any pollutant discharged into jurisdictional waters is unlawful unless a permit is granted through the National Pollutant Discharge Elimination System (NPDES). Jurisdictional waters pertain to interstate waters, adjacent waters and tributaries, including any agricultural ditches, flood plains and significant nexus waters that connect to wetlands, streams or rivers. Within California, vernal pools are considered jurisdictional under the rule. Used as a reference, Federal Emergency Management Agency (FEMA) Flood Maps available via the National Flood Insurance Program (NFIP) show known flood plains that contain known Jurisdictional waters and Riparian / Riverine areas.

No portion of the Property exhibits jurisdictional waters based on the FEMA flood plain overlay (Ref Figure 02: Aerial Imagery). As defined under the CWA 2015 ruling, the drainage ditches on the Property are excluded from the jurisdictional water definition as they only have water within them during precipitation events.

Riparian / Riverine resources are defined under the WRMSHCP as Areas which contain habitat dominated by trees, shrubs, persistent emergents, or emergent mosses and lichens, which occur close to or which depend upon soil moisture from a nearby fresh water source; or areas with fresh water flow during all or a portion of the year.

The Property exhibits a small area that meets the riparian designation, found within the mapped Southern Riparian Willow scrub for this report. Avoidance practices have been implemented for the purpose of preservation within the proposed Project, shown in further detail below.

Criteria for wetlands designation follows the California State Water Resources Control Board (SWB) Preliminary Draft Wetland Area Protection Policy 2014: (a) An area that is covered by shallow water or where surface soil is saturated, either year round or during periods of the year; (b) Where that water coverage has caused a lack of oxygen in the surface soil; and (c) has either no vegetation or plants of a type that have adapted to shallow water or saturated soil. Wetlands designation under the MSHCP are derived from the MSHCP vegetation map and include any open water areas not considered traditionally navigable such as fresh water marsh, bogs, riparian areas, vernal pools, mud flats, salt marshes, naturally occurring and occasionally man made ponds, streams, ditches, canals, and lakes. Applicable areas not previously mapped by the above agencies may still qualify as wetlands when found to fit the above criteria.

The Santa Ana River / Prado Flood Control Basin and adjacent flood plain contain known wetlands. Wetlands were observed adjacent to the Property, though <u>no area was observed to fit the criteria on the Property</u>. Measures to avoid indirect impacts to the adjacent wetland areas have been addressed within the proposed Project and are outlined below.

Criteria for vernal pool designation is based on CDFW descriptions and are defined under similar, but less descriptive terms within the 2015 CWA. Vernal pools are temporary wetlands, forming in depressions during the wet season where the hydrologic soil conditions prevent draining of the water into the substrate. As such, vernal pools have particular soil associations, often alkali hardpan soils, exposed bedrock depressions, or within heavy clay depressions. Wide areas with a profound number of such pooling events are known as vernal pool complexes and are linked not only by soil associations and proximity, but similarly adapted species. During drier months, the pools gradually dry and can take on an affiliated or entirely separate character, often with emergent annual grasses as a dominant or co-dominant species, making dry season determinations difficult or impossible. Specially adapted flora, invertebrates, and a number of native amphibians rely on this ephemeral pooling phenomenon and are associated with the presence of vernal pools. The presence of these species are used as an indicator of the presence of vernal pool habitat, but the final determination of vernal pool status is only met if all conditions above are met: upland depressions that retain water following precipitation events, retentive hydrologic soils that prevent drainage for an extended period of time (in terms of weeks or months), and presence of indicator species. The MSHCP descriptions for vernal pool criteria match the same criteria as CDFW descriptions, but include a localized list of native indicator vernal pool species.

No locations were observed on the Property that correlate with the criteria for vernal pool formation. Soils present on the Property do not allow for restricted drainage, and no locations were found that water could pool for any significant period of time.

2.1.3 General Biological Resources Field Survey

A general biological survey to determine biological resources and habitat assessments for a number of sensitive and listed species, performed by Justin Daniel, Lead Biologist DBA Archon Consulting, was conducted on December 16, 2015 from 9:55AM to 12:34PM.

The purpose of the survey was to catalog and map any vegetation communities on the Property, identify any sensitive vegetation communities, especially in regards to riparian / riverine vegetation types and determine the suitability of the habitat present on the Property in regards to the targeted sensitive species of flora and fauna as listed within this report. The physical on-site properties assessed included vegetation composition, soil substrate composition, slope, aspect, general hydrology, and disturbance to the natural landscape. The initial survey was conducted out of the primary blooming period for most native annual and perennial vascular plant species and out of the breeding season for many sensitive wildlife species. Regardless, all vegetative communities on-site were able to to be characterized and all floral species located on-site were identified to the best knowledge of the

biologist conducting the survey. Floral species were identified using a variety of taxonomic indicators including plant morphology, bloom description (if in bloom), scent, texture / contact attributes and occasionally via physical take of a specimen for later analysis. Vegetation surveys were conducted using the California Native Plant Society (CNPS) Releve' Protocol standards (2007). Field notes and the full CNPS and CDFW Combined Vegetation Rapid Assessment and Releve' Field Fom (2014) were taken during the survey and reprinted for clarity following the survey.

Taxonomic designations for floral species observed conform to the 1993 Jepson Herbarium Manual and updated descriptions via The Jepson Herbarium' Jepson Eflora, an online database revised to Rev. 3 December 2015. Refer to APPENDIX A: VASCULAR PLANT LIST for complete compilation of on-site floral observations.

The Property was surveyed on foot using perimeter scouting and transects at 30' intervals within the on-site survey boundary, established by surveying any areas with permeable soil on and immediately adjacent to the Property as defined above. The survey boundary is set upon and immediately outside the confines of the property lines (where possible) for 100% visual coverage of the Property and about any buildings, debris, vehicles, and fencing. During all surveys, wildlife and evidence of wildlife observed on or near the Property was recorded. All wildlife observed were identified at the time of observation by the lead biologist conducting the survey, to the best of their knowledge. Observations of wildlife included visual confirmation using morphological descriptions, auditory cues (such as bird calls or songs), and indicators of presence such as tracks, scat, dropped fur or feathers, skeletal or remains identification (when applicable), burrow structure, insect / seed predation evidence and, if necessary, also revealing potential hiding areas. Wildlife identification protocols follow the general order: (1) quietly observe the survey area from outside the pre-determined survey area with binoculars; (2) carefully enter the survey area, noting evidence of wildlife habitation or transience at each confirmed observation; (3) travel along 30' transect lines, deviating to provide 100% visual coverage where necessary; (4) collect photographic or physical evidence to substantiate or provide context for determinations; (5) Check list all observations within field notes. At all times, a “no take” protocol is followed in regards to wildlife. Under such protocol, damage to wildlife or their immediate habitat (such as larders or nests) is avoided in most circumstances. Exceptions may occur if it is determined that no harm will come to the targeted wildlife itself (such as climbing a tree to observe an avian nest with eggs). If positive identification of a species requires take or capture of a species (such as with small mammals), the surveyor shall refrain from doing so, instead listing the genus or best known classification determined of the species, and recommending focused surveys occur should the species fall under a suspected listed or otherwise sensitive criteria. Exceptions to the “no take” protocol may occur where an action is performed to preserve the safety of the surveyor. In every instance this should unfortunately occur, the incident and findings are listed in the field notes and full documentation is provided to all agencies whom require notification. Reference APPENDIX B: WILDLIFE LIST for all observations and associated notes.

Vegetation communities of an associated dominant plant species (Phytocoenosis) on the Property were mapped using aerial photography and correlating field notes, photographs and sketched maps created during the survey. The plant communities were classified on-site according to descriptions provided in Holland’s Preliminary Descriptions of the Terrestrial Natural Communities of California (1996) and using known habitat account descriptions provided within the MSHCP Vol II, Section C. Final determination of vegetation stand description follows currently adopted CNPS standards using A Manual of California Vegetation (2009, 2nd edition) & “Online Vegetation Manual” (2015).

Taxonomic descriptions of wildlife follow The American Ornithological Union Checklist (2013) classifications for birds; Center for North American Herpetology (CNAH): Taggart (2013) & Stebbins (2003) for reptiles and amphibians; Wilson and Reeder (2005) & Jones (1992) for mammals, and Gibb & Oseto (2006) and Roth (2009) for arthropods.

Scientific names and the most commonly used common names are provided for each species identified in this report.

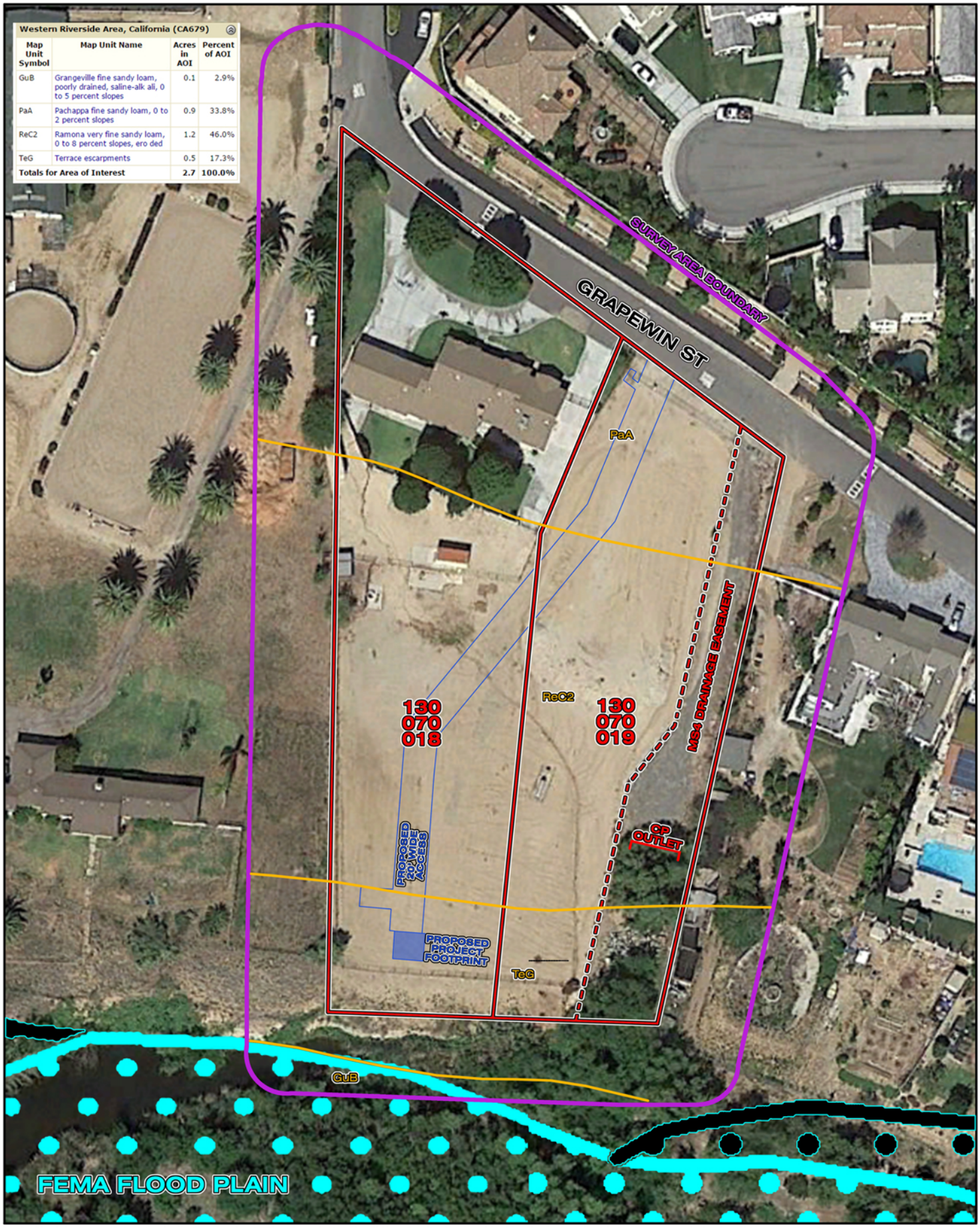

Western Riverside Area, California (CA679)

Map Unit Symbol	Map Unit Name	Acres in AOI	Percent of AOI
GuB	Grangeville fine sandy loam, poorly drained, saline-alk ali, 0 to 5 percent slopes	0.1	2.9%
PaA	Pachappa fine sandy loam, 0 to 2 percent slopes	0.9	33.8%
ReC2	Ramona very fine sandy loam, 0 to 8 percent slopes, ero ded	1.2	46.0%
TeG	Terrace escarpments	0.5	17.3%
Totals for Area of Interest		**2.7**	**100.0%**

AERIAL IMAGERY - WITH SOILS & PROPERTY INFO OVERLAY

0 20 50 100 200 400 FEET

N

VERIZON WIRELESS
GRAPEWIN MONOPALM #T143451
BIOLOGICAL ASSESSMENT REPORT

FIGURE 02

ARCHON CONSULTING

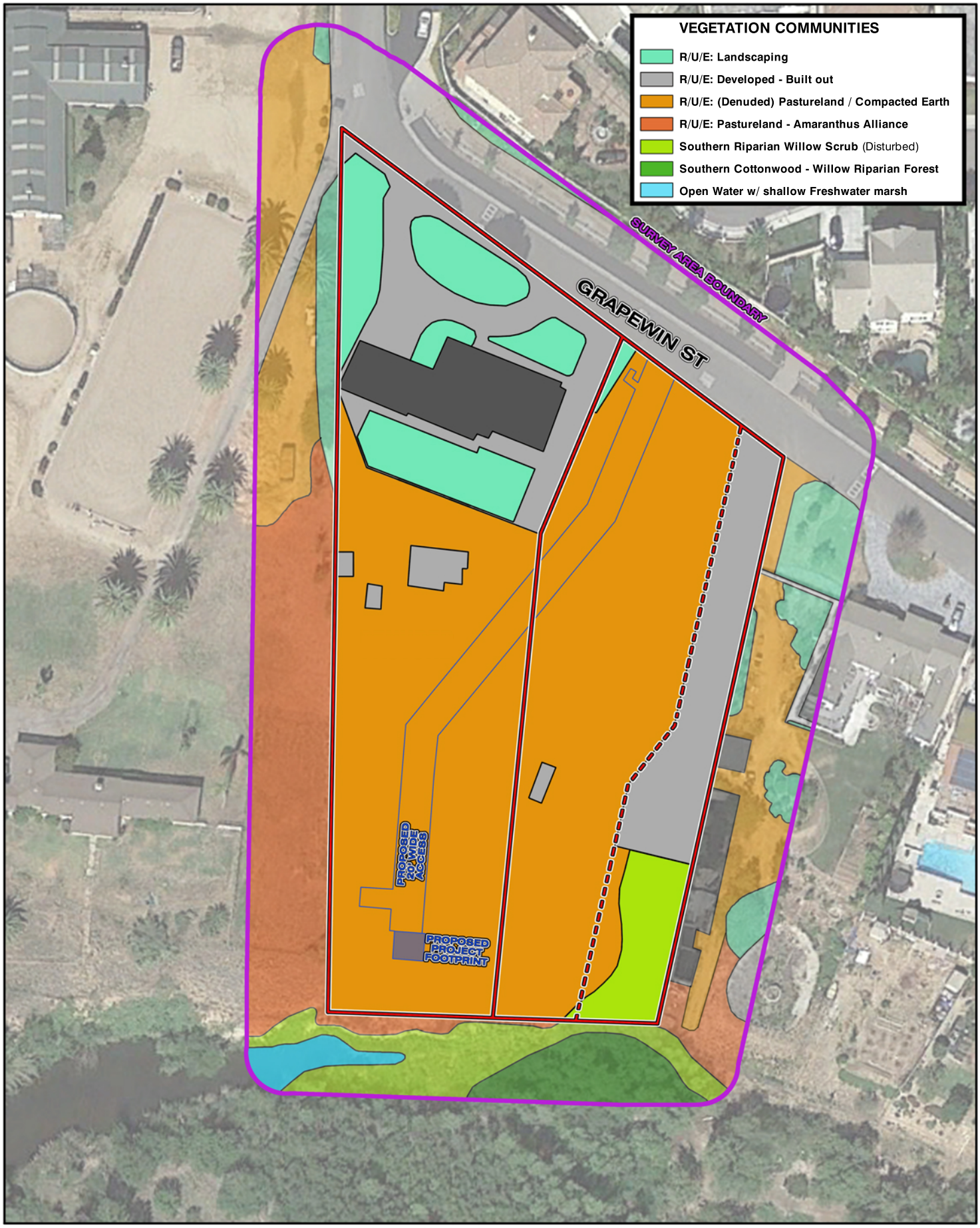

VEGETATION COMMUNITIES - WITHIN 50' SURVEY AREA

0 20 50 100 200 400 FEET

N

VERIZON WIRELESS
GRAPEWIN MONOPALM #T143451
BIOLOGICAL ASSESSMENT REPORT

FIGURE 03

ARCHON CONSULTING

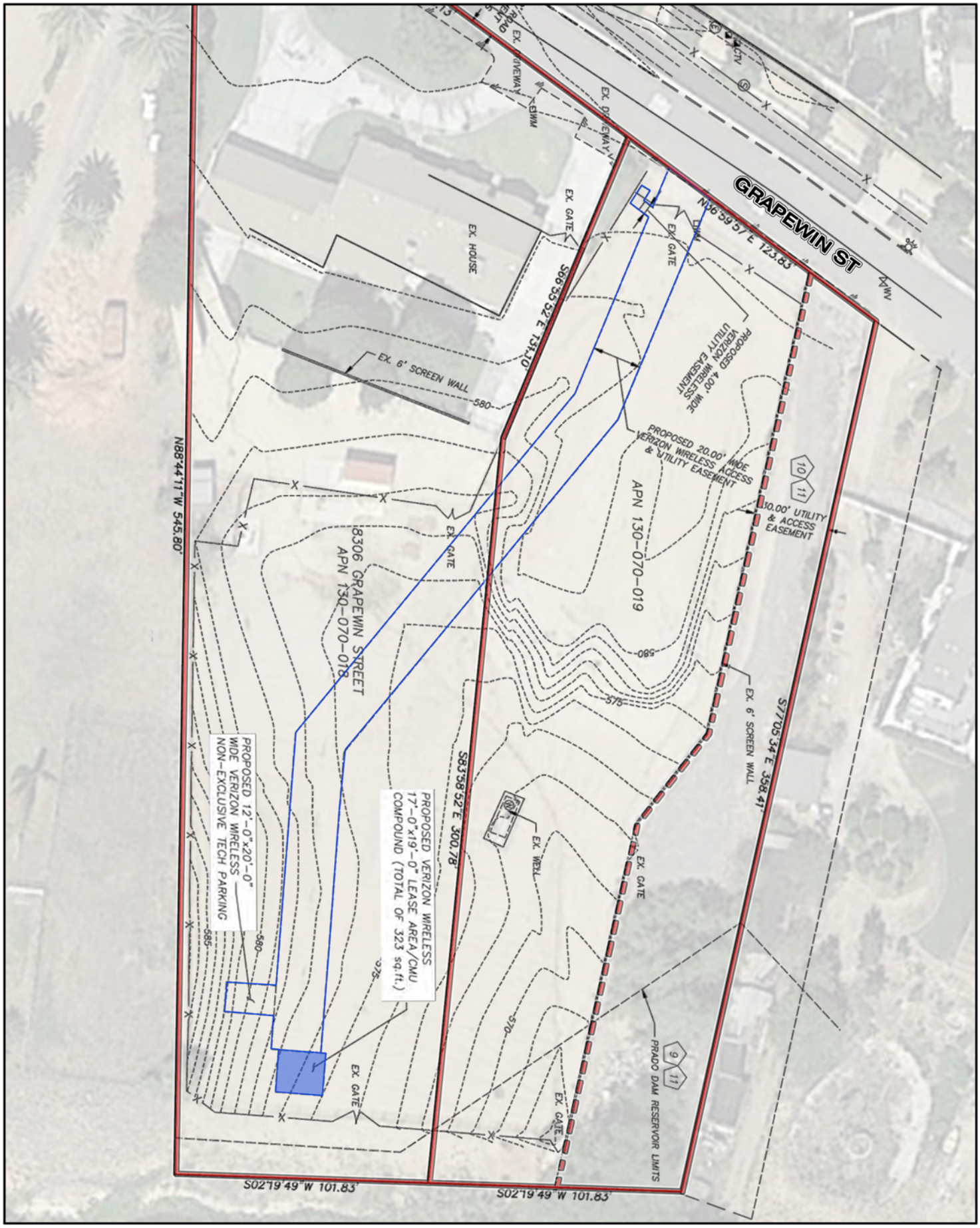

PROPOSED PROJECT PLAN & PROPERTY TOPOGRAPHY

0 20 50 100 200 FEET

N

VERIZON WIRELESS
GRAPEWIN MONOPALM #T143451
BIOLOGICAL ASSESSMENT REPORT

FIGURE 04

ARCHON CONSULTING

Ch. 3.0 EXISTING CONDITIONS

3.1 Topography and Soils

Elevations on the Property range from 548' to 587' (167.0m to 178.9m) above mean sea level (amsl). The high point on the Property is on the southern Property line near the eastern property line, where a hillock from the south-adjacent parcel brings up the ground level and gives the south parcel a north downwards trending slope. The rest of the Property slopes gently downward to the east from the Property corner at Grapewin St. at 584' (178.0m) to the top of the River embankment and drainage rut at 568' (173.1m). From the drainage outflow rut, the Property slopes steeply eastward down the embankment to the lowest point on the east Property line at 548' (167.0m). Just beyond are the marshy riparian lands of the Santa Ana River. A graded pad that flattens out a large area on the north parcel has a mean elevation of 580' (176.8m), where the existing residence stands at a mean elevation of 582' (177.4m). (Reference Figure 04: Proposed Project Plan & Topography)

The Property is situated on a weathered alluvial deposits of mixed, but primarily granite-sourced, fine sandy loams placed by the dynamic flood plain of the Santa River. The locally variable watershed course has created terraced embankments that delineate upland dry environments from the riparian communities below. Based on a U.S. Department of Agriculture (USDA) Web Soil Survey, the soils on the Property consist of Pachappa fine sandy loam of slopes ranging from 0-2% with a well drained aspect, Ramona very fine sandy loam with 0-8% slopes and well drained aspect, and Terrace escarpments. Grangeville fine sandy loam with 0-5% slope and poor drainage are found just beyond the eastern Property lines to the east in the flood plain. Each of these soil profiles runs in bands paralleling the stream course and are subsequently represented with the Pachappa series soils the furthest from the flood plain, Ramona series next furthest, terrace escarpments representing the embankment area, and the Grangeville series fully within the Prado Basin flood plain. No natural formation rocky outcrops were observed on the Property.

The porous weathered substrate and sloped topography of the permeable areas prevents pooling on the Property. None of the soils present are considered sensitive under the MSHCP. The current condition of the soils is characterized as highly disturbed by frequent and thorough mechanical and potentially chemical vegetation removal, laying the majority of the pastureland area bare to rocky substrate and sandy to gravelly surface soils.

3.2 General Hydrology

On the Property, water which doesn't percolate into the topsoil substrate or evaporate flows via gently sloping hilly contours and eroded shallow channels to am eroded drainage outlet at the eastern embankment, just to the south of the easement boundary. This incised channel directs watershed on the Property as a whole to the Santa Ana River flood plain to the east down via an eroded cut in the embankment. The Property itself is not prone to flooding, nor collection of standing water. A FEMA delineated flood plain begins below the embankment, just beyond the eastern Property lines.

From the eastern Property lines, the Santa Ana River flood plain is directly adjacent, with open waters and riparian habitat within the 50 foot extended survey area. The Santa Ana River joins the Prado Flood Control Basin shortly upstream from the rear of Property and both are held by the Prado Dam. Once water has flowed through the dam, the Santa Ana River watershed continues though the communities of Anaheim and Westminster in Orange County to join the Pacific Ocean at the border of Huntington Beach and Newport Beach.

3.3 Vegetative Communities

The Property consists of a two distinct plant communities as defined under MSHCP vegetation associations: Developed / Disturbed Land -Residential / Urban / Exotic and Riparian Scrub – Southern Willow Scrub. The character of the Property as a whole is highly disturbed, with the pastureland area nearly devoid of vegetative cover and the landscaped portion near the residence planted with introduced cultivars and non-native turf grasses. The riparian scrub is restricted to an MS4 storm water outlet area within the drainage easement. The character of this riparian community is highly disturbed from invasive species and litter that has flowed through the drainage pipe and deposited in the rocky flow diffuser.

Approximated area estimates for each identified vegetation community found within the Property are provided below. Similar habitats exist in the developed areas in the vicinity. Of special note is the Southern Cottonwood - Willow Riparian Forest, Valley Freshwater Marsh and Open Water observed within the Santa Ana River Basin directly to the immediate east. Within the extended 50' survey area surrounding the Property, Southern Cottonwood – Willow Riparian Forest was observed in addition to Southern Willow scrub and Open Water. (Reference Figure 03: Vegetation Communities)

3.3.1 Residential / Urban / Exotic: Landscaping **Approximately: 0.24 Ac**

Around the immediate environs of the existing residence, the south parcel has been landscaped with turf grasses, shade and specimen trees and planter shrubs, including potted ferns. All plants here are introduced cultivars and do not fit any CNPS phytocoenosis descriptions, and are therefore unranked. This designation is not considered sensitive and any native plants that may be found here are not part of a natural community.

3.3.2 Residential / Urban / Exotic: Denuded Pastureland (Disturbed) **Approximately: 1.60 Ac**

About two-thirds of the Property, and nearly all of the north parcel is covered by this type of vegetative cover, or more accurately, lack thereof. The earth is laid bare from long term heavy disturbance from grazing animals and feed grasses at one time to more recent use of broadcast herbicide and mechanical scraping. The vegetative cover lies in small patches of invasive and introduced ruderal species adapted to dry, heavily disturbed conditions. Actual cover percentage is estimated to be around 2%, with 98% denudation. The small patches of flora were observed along drainage lines made up of dominant Cheeseweed mallow (*Malva parviflor*a), with instances of Prickly lettuce (*Lactuca serriola*), Common sow thistle (*Sonchus oleraceus*), Pigweed (*Amaranthus albus*), and Red stem filaree (*Erodium cicutarium*). Spread around the pastureland area were isolated specimens of seedling Mexican fan palm (*Washingtonia robusta*), invasive thistles (*Salsola sps*), horseweed (*Conyza canadiensis*), and Tree tobacco (*Nicotiana glauca*). The only native species found here were occasional sandmat (*Euphorbium sps*), a single Desert Willow (*Chilopsis linearis*), and a couple of very old Black elderberry trees (*Sambucus nigra*).

3.3.3 Residential / Urban / Exotic: Developed **Approximately: 0.62 Ac**

This area is defined by impermeable surface cover such as hardscaping, compacted earth / gravel drive paths and all existing buildings. The residence and site access are the primary functions of these areas. There is no vegetation community designation for this portion of the Property. It is shown here as an actively occupied and primary land use.

3.3.4 Southern Riparian Willow Scrub: Black Willow Series (Disturbed) **Approximately: 0.09 Ac**

A small corner of the Property restricted to the MS4 drainage easement outlet to the Santa Ana River contains instances of riparian habitat best described under MSHCP vegetation community designation: Southern Riparian Willow scrub. Holland description of this community falls under Black Willow series as Gooding's black willow (*Salix goodinggii*) is the dominant tree species represented, with instances of riparian scrub species included as the primary cover within the understory. This area is indicative of high soil moisture content influence from both the drainage outlet and the proximity to the Santa Ana River flood plain. Also found within this area are species associated within riparian communities like Mulefat (*Baccharis salicifolia*) and Fremont Cottonwood (*Populus fremontii*), mainly in the lowest elevations on the Property and within the extended survey area just beyond the parcel property lines. Upland natives present here include coyote melon (*Cucuribita palmata*), Southern California wild grape (*Vitis girdiana*) and Stinging nettle (*Utica dioica*). Overall, while there is a significant cover of native species, many other species found here are introduced, with a few being invasive, lending support for a disturbed determination. These species include Common edible fig (*Ficus carica*), invasive mustards (*Brassica sps*), Giant Reed (*Arundo donax*) and a variety of non-native grasses.

As this area has been engineered for municipal watershed runoff, the native community found here is clearly successory following construction and clearing disturbance and shows signs of continued disturbance from litter, invasive species, predation by domestic cats, and occasional MS4 stormwater channel maintenance.

This area is contained by a channelized depression filled with large rock, placed to dissipate the water velocity and evenly spread the flow from the pipe outlet before it discharged into the flood plain. It is contained by the CMU wall on the north parcel on the south, the pipe culvert outlet and access road on the west, a banked area denoting the adjacent parcel property line to the north and the lower elevations of the Santa Ana River to the east. The outlet connects directly to open waters and Southern Riparian forest and woodlands, mostly dominated by a mix of Cottonwood (*Populus fremontii*) and native willows (*Salix sps.*)

3.3.5 Southern Cottonwood - Willow Riparian Forest: Fremont Cottonwood Series

Occurs within extended Survey Area; Does not occur on Property

Within the flood plain of the Santa Ana River / Prado Flood Control basin just beyond the eastern property limits stands a wide expanse of mixed riparian habitats containing woodlands, forest and open water. The Survey Area for vegetation communities performed for this report extends fifty feet (50') beyond the Property lines and it is within the eastern-most edge of this survey area that this sensitive riparian community was identified. While this community was not observed on the Property itself, it's proximity leads to the need for protection from edge effects that may cause indirect impacts. During the survey, this vegetation community was determined to be inaccessible for full floral species documentation, but was substantially categorized at a distance.

Southern Cottonwood – Willow Riparian Forest: Fremont Cottonwood series is dominated by Fremont Cottonwood (Populus fremontii), a tall native tree that is common amongst and near to riparian waterways. Co-dominant within this community, though to lesser degree are native willows (Salix sps.) that provide additional cover associated with highly suitable habitat for many listed riparian wildlife species. This community of ranked G3 S3 and is considered sensitive and threatened.

3.3.6 Open Water w/ Freshwater Cattail Marsh

Occurs within extended Survey Area; Does not occur on Property

Within the flood plain, a small backwater channel from the Santa Ana River was observed, where hydrophytic vegetation and aquatic species were dominant. This area was observed and noted from the riverbank, but not surveyed directly as is occurs beyond the Property boundary, there is a lack of direct access, and would conflict with a general protocol to reduce and avoid disturbance to sensitive communities when not required to do so. Dominant community appeared to be native rush (*Juncus sps*) and cattails (*Typha latifolia*). Riparian birds such as Gadwall (*Anas strepera)*, Common Goldeneye *(Bucephala clangula)*, and American Coot (Fulica americana) were observed utilizing the marshy banks and open water. Open water and marsh are considered jurisdictional waters and are ranked G5 S5 under CNPS rankings.

3.3.7 Residential / Urban / Exotic: Fallow Pastureland (Disturbed)

Tumbleweed Stands: *Amaranthus* Alliance co-dominant w/ Upland mustards: *Brassica* Alliance
Occurs within extended Survey Area; Does not occur on Property

In the adjacent Properties, a heavily disturbed make-up of weedy annuals and introduced perennials cover old pastureland / agricultural areas. These areas appear to once have been cultivated or let to pasture, but have been left to seed. A predominance of Pigweed (*Amaranthus albus*), mustards (*Brassica sps.*), and invasive thistles (*Salsola sps*.) were observed within these areas. Annual grasses appeared to be included occasionally in the mix, including Bermudagrass, canarygrass, perennial ryegrass, and crabgrass. Access to these areas was not achieved due to all of this particular designation occurring on separate private adjacent parcels, but all areas were easily observable visually. A best fit for this designation would be a community of upland mustards co-dominant with stands of *Amaranthus* alliance. These communities are unranked under CNPS phytocoenosis and are not considered sensitive.

3.4 Jurisdictional Waters

The drainage outlet itself does not constitute jurisdictional waters due to the lack of water present during dry periods as defined by the Clean Water Act (CWA). However, there are observations of immediately adjacent open waters and flood plain, associated riverine soils, and hydrological indicators such as stream banks, sandbars, and an observed backwater rill found adjacent to the Property.

The proposed Project implements complete avoidance of this area and no direct impacts are expected to occur. Indirect impacts area addressed under the UWIG portion of the MSHCP, as discussed below.

3.5 Wetlands & Vernal Pools

The Property does not contain criteria suitable for formation of vernal pools. Across the main extents of the Property, the soils and substrate found thereon are too well drained to hold surface rainwater, the aspect of slopes and eroded channels prevent pooling, and there was a lack of any indicator species to support any occurrence of vernal pools.

The Property itself does not indicate presence of wetlands within due to a lack of present indicator species, standing water, or natural formation of flood plain characteristics. However, the Santa Ana River / Prado Basin Flood Plain located immediately adjacent to the East of the Property are considered wetlands. This area is separated from the upland portions on the Property by a steep embankment on which the eastern Property lines lie. Present wetland indicators here are wetland-associated species and observed open waters of the Santa Ana River itself as well as marshy rills and backwater pools where aquatic flora and fauna were observed. The fifty foot extended survey boundary beyond the Property lines contains these definitive wetland characteristics.

The proposed Project 100% avoids direct and indirect impacts to all instances of wetland areas found just outside of the Property.

3.6 Nesting Birds

Nesting locations on the Property are restricted and fairly poor, as the trees on the Property are isolated with little to no canopy cover, with the exception of the area deemed riparian scrub. Still, it remains evident that there are locations on the Property and especially in the adjacent riparian forest to house nesting locations for birds. Of primary concern would be the proximity to the highly suitable habitat for riparian nesting birds within the adjacent riparian flood plain. This area is highly suitable for listed species such Least bell's vireo (*Vireo bellii pusillus*), Southwestern willow flycatcher (*Empidonax traillii extimus*), and Western yellow-billed cuckoo (*Coccyzus americanus occidentalis*). The CNDDB places extant populations of all three species within the immediately adjacent riparian communities and those same communities show very highly suitable habitat based on their preferred habitat descriptions. Also contained within these riparian woodlands are numerous acceptable locations for diurnal and nocturnal raptor nests. Raptors observed during the survey include Red-tailed hawk (*Buteo jamaicensis*) and Northern harrier (*Circus cyaneus*), both of which might utilize the woodlands or wetlands for nesting.

In regards to the proposed Project footprint, which is wholly contained with in the denuded pastureland, it is unlikely that ground nesting birds would use this portion of the Property for nesting purposes given the lack of vegetative cover. There remains a small potential for killdeer (*Charadrius vociferus*) to utilize the Property for nesting, it would not occur on a slope, where the Project footprint is located. While the Project itself does not constitute any particular disturbance or direct impact on nesting bird habitat, temporary construction activities may constitute a disturbance from noise, vibration or presence of construction personnel and heavy machinery.

4.1 MSHCP Referenced Species

The Property is located in the Eastvale Area Plan of the WRMSHCP, which is used as a basis for established habitat descriptions and reporting criteria within Eastvale's Planning Department. According to 2005 Vegetation Records on file with Riverside County, the Property is designated as Agricultural land, Riparian scrub, Riparian woodland, and Riparian forest.

The Eastvale Area Plan identifies a broad number of species, some of them listed, as occurring within, or having the potential to occur within the Plan Area. Each specie listed below is evaluated individually within Table 1: Special Status Plant Species & Table 2: Special Status Wildlife Species in regards to their basic information and likelihood of occurrence on the Property. These species include: Arroyo chub (*Gila orcutti*), Santa Ana sucker (*Catostomus santaanae*), Cooper's hawk (*Accipiter cooperii*), Double-crested cormorant (*Phalacrocorax auritus*), Ferruginous hawk (*Buteo regalis*), Least Bell's Vireo (*Vireo bellii pusillus*), Loggerhead shrike (*Lanius ludovicianus*), Osprey (*Pandion haliaetus*), Peregrine falcon (*Falco peregrinus*), Southwestern willow flycatcher (*Empidonax traillii extimus*), Tree swallow (*Tachycineta bicolor*), Western yellow-billed cuckoo (*Coccyzus americanus occidentalis*), White-faced ibis (*Plegadis chihi*), White-tailed kite (*Elanus leucurus*), Yellow-breasted chat (*Icteria virens*), Yellow warbler (*Setophaga petechia*), Bobcat (*Lynx rufus*), Western pond turtle (*Actinemys pallida*), and Santa Ana River woollystar (*Eriastrum densifolium ssp. sanctorum*).

Should suitable habitats be found on, or adjacent to, the Property for any resources listed below, recommendations shall be made to reduce or eliminate potential impacts to these resources as recommended by the MSHCP, in accordance with mandated CEQA standards. Following submittal of the Biological Assessment Report to the City of Eastvale Planning Department for review, determinations made by the department for further studies, expanded or decreased mitigation requirements, or clarifications shall be performed by the pertinent and qualified parties involved with ensuring compliance with all pertaining regulation standards that apply.

4.1.1 Urban / Wildlands Interface Guidelines

According to Section 6.1.4 of the MSHCP, the Urban / Wildlands Interface Guidelines (UWIG) are intended to address indirect effects associated with locating development in proximity to MSHCP conservation areas. (Riverside County 2003). The Project Property is directly adjacent to a defined WRMSHCP conservation area: Existing Core A: Prado Basin & Santa Ana River and therefore apply to the Property as a whole and the proposed Project.

Goals, Issues and consideration as defined by the Urban / Wildlands Interface Guidelines are addressed in detail within the following chapter.

4.1.2 Criteria Area Species with Additional Survey Needs and Procedures

Section 6.3.2 of the MSHCP, states "In addition to the Narrow Endemic Plant Species listed in Section 6.1.3, additional surveys may be needed for certain species in conjunction with Plan implementation in order to achieve coverage for these species. … Surveys shall be conducted within suitable Habitat for the following species according to accepted protocols." A list of species is shown as occurring within Riverside County that need additional survey procedures following identification of suitable habitat. For the purpose of this report, only the species that are known occur locally and potentially are associated with identified habitats on or near the Property are included. These species are: Burrowing Owl (*Athene cunicularia hypungea*) and Smooth Tarplant (*Centromadia pungens ssp. laevis*). Each is shown within either Table 1: Special Status Plant Species or Table 2: Special Status Wildlife Species.

Should any of the above species be found to have suitable habitat on the Property itself, focused surveys are required unless avoidance measures of defined sutiable habitat are implemented to the percentages laid out for each species within MSHCP Vol II-B. A full habitat assessment, species description, including survey protocols are researched and followed during schedule follow-up surveys that focus on the CAS during the appropriate season and conditions.

No suitable habitat for either Criteria Area Species was observed on the Property. No focused surveys are required for the proposed Project.

4.2 Sensitive Habitats

4.2.1 Riparian / Riverine Habitat

A small portion of the Property has been determined to support riparian / riverine habitat in the vegetation community identified as Southern Willow Scrub, located in the north eastern corner and is also found to occur in riparian lands immediately adjacent. As a whole, this habitat at large is considered sensitive and is ranked as G3 S3 under Black Willow thickets: *Salix goodinggii* Alliance as described by vegetation types in a "Manual of California Vegetation" (Sawyer, Keeler-wolf, & Evens 2009). Within the survey area just beyond the Property lines, Southern Cottonwood - Willow Riparian Forest: Fremont Cottonwood series: *Populus fremontii* Alliance was observed. This riparian forest is also ranked G3 S3. This ranking demonstrates that this vegetation type is moderately threatened globally and within the state of California. A number of known threats to the integrity and long term sustainability of this community type include development encroachment, water diversion, invasive species, fire and pollutants / toxics.

The Proposed Project avoids these sensitive vegetation communities entirely.

4.3 California Species of Special Concern

A number of species that are listed as California Species of Special Concern (CSSC) by the CDFW which are known to occur locally and are addressed in turn within Table 2: Special Status Wildlife Species. While these species may or may not have a listing rank designating mandatory protections under the ESA or CESA, the presence of these species indicates habitat suitability that may be eligible for superior preservation or protective measures to ensure the continued population stability and integrity of biological diversity offered by their occurrence, whether year-round or on a seasonal (migratory) basis. Listing status and the likelihood of occurrence on the Property are shown within the Table below. These species are identified by the CNDDB within a five mile radius about the subject Property with at least one confirmed record of species presence. Duplicate CSSC species are not included in this list, as they are already identified within sections above. These species are: Tri-colored blackbird (*Agelaius tricolor*), Grasshopper Sparrow (*Ammodramus savannarum*), Orangethroat whiptail (*Aspidoscelis hyperthra*), Red-diamond rattlesnake (*Crotalus ruber*), Western mastiff bat (*Eumops perotis californicus*), Western yellow bat (*Lasiurus xanthinus*), Northern leopard frog *(Lithobates pipiens*), Pocketed free-tailed bat (*Nyctinomops femorosaccus*), Coast horned lizard *(Phrynosoma blainvilli*), and Coastal California gnatcatcher (*Polioptila californica californica*).

4.4 California Rare Plants

Within western Riverside County exist a number of species identified by the California Native Plant Society (CNPS) and adopted by CDFW as flora that are considered rare, threatened, extirpated or potentially extinct within the state. Impacts to these species must be analyzed under CEQA, as they functionally meet the definition of Rare or Endangered under CEQA Guidelines §15125; (c) and/or §15380.

The ranking system categorizes each species based on rarity from one or more factors including limited distribution / range, narrow habitat requirements, level of threat from natural and/or man-made events, and those species which more information is needed to ascertain population health and long term viability. While these plants are not currently listed within the state of California or federally as protected, they show a potential for future listing and are deserving of protection from impacts that may further exacerbate current threats or extirpate local populations. The ranking system generally follows a binary system where the first number indicates a general rareness within the state of California with the lowest number (1) indicating the rarest plants. This is usually followed by letters A or B that indicate if the plant is presumed extirpated or extinct in the state, with A = extirpated and B = known extant populations within the state. The second number following a point is a valuation of current threat to the existing populations with the lowest number indicating serious threat to known populations.

CA rare plant listed below that are not already listed in separate categories above are:
Chaparral sand-verbena (*Abronia villosa var. aurita*), Lucky morning-glory (*Calystegia felix*), Many-stemmed dudleya (*Dudleya multicaulis*), Robinson's pepper-grass (*Lepidium virginicum var. robinsonii*), Jokerst's monardella (*Monardella australis var. jokerstii*), and San Bernardino aster (*Symphyotrichum defoliatum*).

TABLE 1: SPECIAL STATUS PLANT SPECIES (with Identified Potential for occurrence within 5 mile radius)

SPECIES	STATUS	ASSOCIATED HABITAT	RANGE / DISTRIBUTION	BLOOM PERIOD	OCCURRENCE PROBABILITY*
PLANT SPECIES					
Abronia villosa var. aurita Chaparral sand-verbena	**RARE: 1B.1**	Sandy soils; Chaparral, coastal scrub, upland riparian sandbars, dunes	**Elev: < 1600 m** Most represented in Riverside County; occurs in Los Angeles, San Diego and potentially Orange and Imperial Counties, & Arizona.	**Mar – Aug** Annual or perennial herb	**Absent.** Vegetation on Property is highly disturbed. Soils are mostly loams.
Calystegia felix Lucky morning-glory	**RARE: 3.1**	Occasionally alkaline soils, alluvial terraces; Meadow / seep, Riparian scrub	**Elev: 30 – 215 m** Only known since 2011 from locations around Chino, CA. Full range not yet defined.	**Mar – Sep** Annual herb (Rhizome)	**Absent.** Not known within Santa Ana River. Nearest observation in Chino 3.2 miles to east.
Centromadia pungens ssp. laevis Smooth Tarplant	**RARE: 1B.1** **MSHCP-CAS**	Alkali meadow, alkali scrub, disturbed areas; Grasslands, chenopod scrub, meadows / seeps, playas, riparian woodland	**Elev: 50 – 880 m** Most represented in western Riverside County valleys; occurs in small clusters around Southern California. Likely extirpated from Central Valley, possible instances in deserts.	**Apr – Sep** Annual herb	**Absent.** Site is too highly degraded for suitability. Only a single recent observation from 2004 recorded in area.
Dudleya multicaulis Many-stemmed dudleya	**RARE: 1B.2** **MSHCP-NEPS**	Clay soils; Chaparral, coastal scrub, valley and foothill grassland	**Elev: 20 – 1000 m** Found from the southern foothills of the Transverse Range in Los Angeles County south to around the Santa Ana Mtns (Coastal Range) to Camp Pendleton in San Diego Cnty.	**Apr – Jul** Perennial herb	**Absent.** Soils and habitat on Property not suitable. Known from Chino hills and Norco Ridge at extents of search area.
Eriastrum densifolium ssp. sanctorum Santa Ana River woollystar	**FE** **SE** **RARE: 1B.1** **MSHCP-Riparian EVAP**	Sandy soils in flood plains, alluvial terraces Chaparral, coastal scrub	**Elev: 260 – 690 m** Found only within the Santa Ana River flood plains in the San Bernardino and Riverside inland valleys of the Inland Empire	**May – Sep** Perennial herb	**Absent.** No suitable habitat found on the Property. Single known location within area approx 3 miles upstream.
Lepidium virginicum var. robinsonii Robinson's pepper-grass	**RARE: 4.3**	Xeric soils; Chaparral, coastal scrub	**Elev: 20 – 1340 m** Found in coastal valleys and foothills from Los Angeles County south into San Diego County, including western Riverside County.	**Jan – Jul** Annual herb	**Absent.** No suitable habitat occurs on Property.
Monardella australis ssp. jokerstii Jokerst's monardella	**RARE: 1B.1**	Alluvial benches, steep scree; Lower montane coniferous forest, chaparral	**Elev: 1350 – 1750 m** Known from eastern San Gabriel mountains between Mt. Baldy & Lytle Creek.	**Jul – Sep** Perennial herb	**Absent.** No suitable habitat occurs on Property. Last confirmed local observation from 1952.

SPECIES	STATUS	ASSOCIATED HABITAT	RANGE / DISTRIBUTION	BLOOM PERIOD	OCCURRENCE PROBABILITY*
PLANT SPECIES (cont'd)					
Symphyotrichum defoliatum San Bernardino aster	**RARE: 1B.2**	Mesic grasslands, disturbed areas, Cismontane woodland, coastal scrub, lower montane coniferous forest, meadow / seep, marsh / swamp	**Elev: < 2040 m** Coastal areas and up into the Transverse and Peninsular Ranges from Los Angeles county south to San Diego County into Baja California.	**Jul – Nov** Perennial herb	**Absent.** Vegetation on Property is not suitable. Closest and most recent observation is at edge of 5 mile radius and recorded in 1928.

* Occurrence probability is in relation to proposed Project footprint (site) & habitats directly impacted by the Project. Probability partly factors in Property as a whole and adjacent parcels, though those areas may yield different determinations.

TABLE 2: SPECIAL STATUS WILDLIFE SPECIES (with Identified Potential for occurrence within 5 mile radius)

SPECIES	STATUS	ASSOCIATED HABITAT	RANGE / DISTRIBUTION	ACTIVE PERIOD	OCCURRENCE PROBABILITY*
FISH SPECIES					
Catostomus santaanae Santa Ana sucker	**FT** **IUCN: EN** **MSHCP: EVAP**	Aquatic: Freshwater Flowing waters, preferring rubble or boulder beds, clear water with algae present	Endemic to Los Angeles, San Gabriel, Santa Ana and (possibly) Santa Clara river systems of Los Angeles, Orange, San Bernardino and Riverside Counties.	**Breeding: Mar – Jun** Year-round	**Absent.** No open water exists on the Property. Suitable habitat found nearby.
Gila orcutti Arroyo chub	**IUCN: VU** **MSHCP: EVAP**	Aquatic: Freshwater Slow flowing streams or rivers w/ mud or sand beds	Coastal watersheds from San Luis Obispo County south to N. San Diego County.	**Breeding: Feb – Aug** Year-round	**Absent.** No open water exists on the Property. Suitable habitat found nearby.
AMPHIBIAN SPECIES					
Lithobates pipiens Northern leopard frog	**IUCN: LC** **CSSC**	Freshwater ponds, pools & streams, Aquatic Marsh / swamp, flowing or standing water, wetlands, riparian	Great Basin and S Rocky Mtns. northeast into Canada and Atlantic seaboard. In So. Cal, isolated patches from Prado Dam to coast and Malibu watersheds.	**Breeding: Mar – Jun** Hibernates Winter	**Absent.** Local occurrence at Prado Basin 4.3 miles away, noted as likely transplants.
REPTILE SPECIES					
Actinemys pallida Western pond turtle	**IUCN: VU** **MSHCP: EVAP**	Freshwater ponds, pools & streams, Aquatic Marsh / swamp, flowing or standing water, wetlands, riparian	Coastal range watersheds from San Francisco Bay south into Baja California. East to western face of the Sierra Nevada range. Isolated population in Mojave desert.	**Breeding: Winter - Spring** Active: Year-round	**Absent.** No suitable habitat in site. Local occurrences known within Chino Hills State Park.
Aspidoscelis hyperthra Orangethroat whiptail	**IUCN: LC** **CSSC**	Washes, rocky areas, woody perennial shrubs; Chaparral, cismontane woodland, coastal scrub	From Santa Ana River watershed south to western front of Peninsular range into Baja California Del Sur.	**Breeding: Jun – Jul** Year-round	**Low.** Habitat on property not suitable to provide forage or cover.

SPECIES	STATUS	ASSOCIATED HABITAT	RANGE / DISTRIBUTION	ACTIVE PERIOD	OCCURRENCE PROBABILITY*
REPTILE SPECIES (cont'd)					
Crotalus ruber Red-diamond rattlesnake	**IUCN: LC** **CSSC**	Rocky areas, dense vegetation or other cover Chaparral, desert scrub, coastal scrub, dry woodlands, grasslands	From Morongo Valley and Chino Hills south into all of Baja California. Eastern most populations edge into Imperial County.	**Breeding: Mar – May** Torpor: Cold Months	**Very Low.** Habitat not suitable, may serve as transitory parcel.
Phrynosoma blainvilli Coast horned lizard	**IUCN: LC** **CSSC**	Open areas near cover, sandy or rocky sites, Calif. harvester ants Chaparral, cismontane woodland, coastal scrub, bluffs, desert wash / woodland, grassland, riparian scrub / woodland	From Shasta Lake south through the Central Valley ranging from western face of the Sierras to the Pacific. South into N. Baja California in coastal valleys and foothills.	**Breeding: May – Jun** Torpor: During Cold and Extreme heat	**Low.** Habitat marginal on the Property.
BIRD SPECIES					
Accipiter cooperii Cooper's hawk	**IUCN: LC** **MSHCP: EVAP**	Nests in riparian trees, woodlands, canyons, or oaks. Typically 25'+. Cismontane woodland, riparian forest / woodland, montane coniferous forest	Year round across most of temperate Continental United States. Summers in S. Canada and winters in Mexico & Central America.	**Breeding: Feb – Aug** Year-round in Coastal SoCal	**Low.** Habitat marginal on the Property, but highly suitable in adjacent flood plain.
Agelaius tricolor Tri-colored blackbird	**IUCN: EN** **CSSC**	Open freshwater, Nests in large colonies in tall dense riparian vegetation Freshwater marsh, swamp, wetlands, wide riparian w/ open waters	Central Valley from Redding south to Bakersfiled and CA Central Coast. In SoCal, coastal freshwater wetlands from Santa Barbara and Santa Clarita south to Tijuana River. Few populations in Baja Calif.	**Breeding: Apr – Jul** Year-round Partially migratory	**Absent.** Habitat not suitable. Known populations recently observed in Mill Creek, Chino and Prado Flood Basin.
Ammodramus savannarum Grasshopper Sparrow	**IUCN: LC** **CSSC**	Nests in loose colonies in scattered shrubs or tall grass Valley and foothill grasslands	Migratory species, ranging from Great Basin east across Rockies to Atlantic seaboard & Coastal California for summer; Mexico, Southern US, and Carribean islands in winter. Year-round in TX and S. AZ	**Breeding: Summer** Migratory: late Spring to Fall in CA	**Absent.** Habitat not suitable on the Property. Transient occurrence potential only.
Athene cunicularia hypungea Burrowing Owl	**IUCN: LC** **CSSC** **MSHCP: CAS**	Nests in fossorial burrows, esp. ground squirrel burrows and badger dens Coastal prairie, grassland, sparse scrub, agricultural, riverine	Summer in Great Basin & Mojave. Year round in coastal CA into Mexico and east into W. Texas. Isolated population in Florida.	**Breeding: Feb – Aug** Year-round Partially migratory	**Absent.** Habitats not suitable on Property. No suitable burrows or forage opportunities observed during survey.

SPECIES	STATUS	ASSOCIATED HABITAT	RANGE / DISTRIBUTION	ACTIVE PERIOD	OCCURRENCE PROBABILITY*
BIRD SPECIES (cont'd)					
Buteo regalis Ferruginous hawk	**IUCN: LC** **MSCHP: EVAP**	Nests in isolated trees, cliff ledge, structure, or out crop, from 6' to 70' Grasslands, prairie, scrubland, pinyon-juniper forest, occasional canyons and foothills	Summers in Northern Rocky Mtns into S Canada, Year-round in Great Basin to S. Rocky Mtns. Winter in West Coast and south into Mexico. West of Mississippi River.	**Breeding: Summer** Migratory: Winter only in Calif.	**Very Low.** Habitat not suitable. May be transient over Property in winter months.
Coccyzus americanus occidentalis Western yellow-billed cuckoo	**FT** **SE** **IUCN: LC** **MSHCP: Riparian**	Nests in thick riparian woodlands and forest, cottonwood – willow alliance preferred. Wide riparian forest and woodland in lower elevations.	Summers to breed in wide rivers of Southern and Eastern US. Rare west of the Rocky Mtns. Overwinters in Mexico.	**Breeding: Summer** Migratory: late spring to early fall in US	**Very Low.** No suitable habitat present in footprint. Highly suitable habitat in adjacent flood plain, with CNDDB observation (1986) within 0.5 mile.
Elanus leucurus White-tailed kite	**IUCN: LC** **MSHCP: EVAP**	Nests in isolated trees, tree lines or edges of forests. Open grassland, sparse woodland, agricultural areas, marshes, wide riparian, open shrubland	Non-migratory. Coastal and central valleys in West Coast. Separate populations in Mexico, Florida, and South America	**Breeding: Summer** Year-round	**Low.** Habitat not suitable on the Property, but may be present in nearby conservation core and forage over the Property
Empidonax traillii extimus Southwestern willow flycatcher	**FE** **SE** **MSHCP: Riparian**	Nests in dense willow or mulefat thickets in riparian areas Riparian woodland & forests	Migratory between Southern Calif, AZ, NM, E. TX and South UT & NV in the summer to Central America in winter months.	**Breeding: late Spring - Summer** Migratory: Summer in So Calif.	**Low.** Suitable habitat found on Property is disturbed. No suitable habitat in site. Adjacent flood plain highly suitable.
Falco peregrinus Peregrine falcon	**IUCN: LC** **MSHCP: EVAP**	Nests primarily on cliff ledges, high buildings, or rocky outcrop w/ natural depression Wide range of habitats: urban, agricultural, open forests, woodland, prairies, grasslands	Highly migratory from Artic circle in Alaska down Western continental US during summer months. Overwinters in Central and South America and along south-eastern US seaboard. Can be found year-round west of the Rocky Mtns south into Mexico.	**Breeding: late Spring - Summer** Year-round in Calif.	**Low.** Habitats on the Property are not suitable for nesting. May be used for transience.
Icteria virens Yellow-breasted chat	**IUCN: LC** **MSHCP: EVAP**	Nests in dense shrubs, preferring riparian areas Riparian forest, woodland, & scrub, occasionally canyons	Migratory, moving from continental United States, (excepting Great Lakes region) in the summer for breeding, then wintering in Central America.	**Breeding: Summer** Migratory: Summer in So Calif.	**Low.** Habitat not suitable in footprint, but is suitable on Property. Nearby occurrences are noted every summer.

SPECIES	STATUS	ASSOCIATED HABITAT	RANGE / DISTRIBUTION	ACTIVE PERIOD	OCCURRENCE PROBABILITY*
BIRD SPECIES (cont'd)					
Lanius ludovicianus Loggerhead shrike	**IUCN: LC** **MSHCP: EVAP**	Nests often built within thorny shrubs such as cacti, brambles and vines Chaparral, coastal scrub, desert scrub, riparian washes, rocky grassland, agricultural areas	Found year-round across most of continental United States and Mexico, and migratory in North and Mid-West during Winter. Prefers to be near open areas such as pasture within its range.	**Breeding: Summer** Year-round in So Cal.	**Low.** Habitat highly disturbed, but still potentially suitable for forage and transience. Known in Norco and Prado Reservior.
Pandion haliaetus Osprey	**IUCN: LC** **MSHCP: EVAP**	Nests in open platforms, structures and trees, building a large nests used by generations Coastal bluff, coastal riparian, wetlands and open waters inland	Migratory, traveling great distances from summer breeding grounds in Canada, Alaska and Pacfic NW to Wintering area in Central and South America. Year-round in Baja Calif, Gulf Coast and Florida.	**Breeding: Summer** Migratory: Winter in So Cal,. Some year-round	**Absent.** Habitat not suitable on the Property. Adjacent River likely used for hunting.
Phalacrocorax auritus Double-crested cormorant	**IUCN: LC** **MSHCP: EVAP**	Nests in colonies on the ground or treelines near open water bodies Wide Riparian areas, open waters of variable salinity, wetlands, marsh	Migratory, remaining within North America and Caribbean. Summers in Central Canada and winters in the South, Altantic seaboard and Pacific Coast. Some populations year-round in Florida & Alaska	**Breeding: Summer** Migratory: Winters in So Cal	**Absent.** Habitat not suitable on the Property. Adjacent River likely used for hunting and roosting.
Plegadis chihi White-faced ibis	**IUCN: LC** **MSHCP: EVAP**	Nests in reeds and rushes, within marshes Marsh / swamp, open low flowing riparian with open water	Migratory, breeding in inland marshes in the Great Basin, Owens Valley, & Rocky Mtns. Winters in Mexico, W. LA and E. Texas. Local occurrences reported year-round.	**Breeding: May – Jun** Year-round in So Cal	**Absent.** Habitat not suitable on the Property. Adjacent River suitable for transience and forage.
Polioptila californica californica Coastal California gnatcatcher	**FT** **IUCN: LC** **CSSC**	Nests in dense, low shrubs, often within canyons near water. Coastal sage scrub, foothills and canyons	Isolated patches of highly suitable sage scrub within Southern California from Transverse Range foothills south along Coastal Range into Baja California.	**Breeding: Feb – Jul** Year-round	**Absent.** Habitat not suitable on or near the Property.
Setophaga petechia Yellow warbler	**IUCN: LC** **MSHCP: EVAP**	Nests in dense shrubs, brambles, or small trees Riparian scrub, woodland, & forest, shrubland, marshes	Migratory, breeding over a huge range from Arctic Circle south to S. Mexico, coast to coast. Migratory through deserts & South. Winter in Central & S. America.	**Breeding: Summer** Migratory: Summer in So Cal	**Low.** Habitat suitable within the riparian scrub and adjacent woodlands to the Property.

SPECIES	STATUS	ASSOCIATED HABITAT	RANGE / DISTRIBUTION	ACTIVE PERIOD	OCCURRENCE PROBABILITY*
BIRD SPECIES (cont'd)					
Tachycineta bicolor Tree swallow	**IUCN: LC** **MSHCP: EVAP**	Nests in tree cavities and nest boxes. Occasionally in cliff burrows & eaves Riparian scrub, marsh / swamp, woodland, and adjacent grasslands, pasture, and scrubland	Long distance migrant. Breeds from Alaska and N. Canada south in to Northern Continental United states. Migratory over Great Basin and Mid-West. Winters in Southern California, Gulf Coast, Mexico, and Central America.	**Breeding: Summer** Migratory: Winter to Year-round in So Cal	**Low.** Habitat suitable within the riparian scrub and adjacent woodlands to the Property.
Vireo bellii pusillus Least Bell's Vireo	**FE** **SE** **IUCN: LC** **MSHCP: Riparian EVAP**	Nests near the ground in dense brush, especially in riparian scrub Mainly Riparian scrub, woodlands, & forest, Also adjacent scrubland, grassland, chaparral.	Migratory. Breeds during summer in fragmented drainages within Southern California (Santa Barbara, Santa Clara, Ventura, Los Angeles, Orange, San Bernardino, Riverside, and San Diego Counties) Winters in Baja California, Mexico.	**Breeding: Mar – Aug** Migratory: Summer in So Cal	**Low.** No suitable habitat in site. Habitat suitable within the riparian scrub and adjacent woodlands to the Property. Observed locally.
MAMMAL SPECIES					
Lynx rufus Bobcat	**IUCN: LC** **MSHCP: EVAP**	Roams over wide range, preferring areas of cover From coastal bluffs to upper montane forest and all habitats between, excepting urban areas	Ranges over full continental United States, Southern Canada, and well into Mexico. Exceptions to range include elevations over 7500' and the Great Lakes where it has been extirpated.	**Breeding: Winter - Spring** **Activity:** Year-round	**Low.** Property and local community developed and highly disturbed.
Eumops perotis californicus Western mastiff bat	**IUCN: LC** **CSSC**	Roosts in rocky canyons and cliff faces during day Chaparral, coastal scrub, desert scrub, upland forests and woodland	Widespread from South western US deserts and inland valleys from the San Joaquin Valley south and east into Mexico.	**Breeding: Spring** **Activity:** Year-round Nocturnal	**Low.** Local occurrences noted but dated. May use site for transience or forage.
Lasiurus xanthinus Western yellow bat	**IUCN: LC** **CSSC**	Roosts in trees, especially those with simple cover like palms Wide range of habitats, incl. woodland, scrub, chaparral, desert canyons	Ranges from inland valleys and foothills of Southern California east to New Mexico and south to Mexico City in Mexico.	**Breeding: Spring** **Activity:** Year-round Nocturnal	**Low.** Suitable roosting habitat not present on Property, but may forage over and roost nearby.
Nyctinomops femorosaccus Pocketed free-tailed bat	**IUCN: LC** **CSSC**	Roosts in rocky canyons and cliff faces, inhabiting caves and roof tiles Chaparral, foothills, desert scrub, xeric areas	Forms large colonies that remain generally local. Southerwestern US and Northern Mexico. From Southern California to west Texas and south to Michoacan.	**Breeding: Spring** **Activity:** Year-round Nocturnal	**Low.** Local occurrences noted but dated. May use site for transience or forage.

* Occurrence probability is in relation to proposed Project footprint (site) & habitats directly impacted by the Project. Probability partly factors in Property as a whole and adjacent parcels, though those areas may yield different determinations.

LEGEND & REFERENCE GLOSSARY	
US. FEDERAL CLASSIFICATIONS LIST	
FE: Federally listed as Endangered	FT: Federally Threatened
CA. STATE CLASSIFICATIONS LIST	
SE: State listed as Endangered	ST: State listed as Threatened
CDFW - California Department of Fish and Wildlife CSSC – California Species of Special Concern (Declining populations or vulnerable species native within the state) IUCN – International Union for Conservation of Nature (Establishes a globally rank for sensitivity and vulnerability of species) EX- Presumed extinct EW – Presumed extinct in the wild CR – Critically Endangered EN – Endangered VU – Vulnerable NT – Near Threatened CD – Conservation Dependent LC – Least Concern RARE – Listed and ranked by CNPS and adopted by CDFW for Rare Plant List of California Native Flora.	
MSHCP: Riverside County Multiple Species Habitat Conservation Plan (2003) CAS – Criteria Area Species with Additional Survey Needs Riparian – Denotes a species dependent on riparian habitat EVAP – Noted as potentially occurring within Eastvale Area Plan	

4.5 Listed species with a potential to occur

None of the species listed above, nor sign of a listed species above was observed during the survey. The survey was performed out of the blooming period season for many sensitive floral species, but habitat determinations were definitive and clear. Fifteen species listed above have a Low potential to occur, based on the proximity of highly suitable habitat, known local occurrences, and ability to access the Project footprint, but as no natural habitat occurs within the Project footprint, it is not anticipated for the species to utilize the footprint area for anything other than transitory purposes. Others may utilize the final Project Monopalm cellular tower for nesting, perching or roosting. Very Low ranked species have marginally suitable, or unsuitable habitat nearby or on the Property, but are migratory or mobile and have been reported within the 5 mile radius and may use the Property for transience, preventing a definitive "Absent" designation. Two species with a potential to occur are State or Federally listed, but do not have a need for focused surveys due to a definitive lack of suitable habitat within the Project footprint. Absent designations are determined based on the complete lack of habitat suitability on and / or near the footprint or Property, lack of current local observances recorded and lack of access from surrounding geographical features.

Impacts to potentially occurring species would not be considered substantial due to the severely degraded habitat quality of the area within the Project footprint, the relative isolation from other habitats by surrounding development, excepting the adjacent conservation area, and a miniscule project footprint size compared to known range of populations of the these potentially affected species.

Given the proximity to highly suitable riparian habitat within the conservation area of the Santa Ana River flood plain and the small portion of observed riparian scrub on the Property that connects to the flood plain directly, it is possible that avian nesting sites for a few of the species listed above might occur adjacent to or on the Property. These species include Cooper's hawk (*Accipiter cooperii*), Least Bell's Vireo (*Vireo bellii pusillus*), Southwestern willow flycatcher (*Empidonax traillii extimus*), Tree swallow (*Tachycineta bicolor*), Western yellow-billed cuckoo (*Coccyzus americanus occidentalis*), White-faced ibis (*Plegadis chihi*), Yellow-breasted chat (*Icteria virens*), and Yellow warbler (*Setophaga petechia*). A number of the above species are listed federally and with the state, or are raptor species that are highly sensitive to nest disturbance.

In order to avoid impacts to nesting birds and their young, construction activities should be initiated outside of the primary nesting season for birds (April 1 – August 15). If construction must occur during the nesting season, a nesting bird survey should be conducted within 3 days prior to commencing such activities. If nesting birds are found in the Project footprint or adjacent areas, project activities including manual clearing or heavy equipment use should not occur within a buffer zone established by a qualified biologist (150 feet standard, 250 feet in riparian areas, and 500 feet of raptor nests) until it is verified by the biologist that young have fledged or otherwise the nesting has completed.

Least bell's vireo (*Vireo bellii pusillus*)

Least bell's vireo is one of four subspecies of Bell's vireo recognized by the American Ornithologist's Union (AOU). It's known range is entirely within California and northern Baja California, preferring lowland riparian habitat for foraging a breeding. The species is listed as State Endangered (SE) and federally endangered (FE), as as such, suitable riparian habitat where known occurrences of this species exist are protected. Historical distribution of the species has dwindled due to population fragmentation, brown-headed cowbird (*Molothrus ater*) brood parasitism, and loss of breeding habitat due to development, and stream channel degradation (channelizing or invasive species). While they associate primarily with Willow (*Salix* & *Chilopis*) dominated riparian areas, especially with a thick understory of *Baccharis* species, they are often found in adjacent riparian woodlands, chaparral and sage scrub communities. (Patten UCR 1998) Nests are often within one meter of the ground and within dense shrub cover, most often within stands adjacent to or within riparian corridors. The most frequently used species for nesting include willows (*Salix sp.*), Mulefat or salt marsh baccharis (*Baccharis sp.*), California wild rose (*Rosa californica*) poison oak (T*oxicodendron diversilobum*), mugwort (*Artemesia sp.*) and cottonwood (*Populus sp.*).

The Santa Ana River and Prado flood control basin are known to support breeding, as well as year round residents of Least bell's vireo. The Property has a low likelihood to be utilized by Least bell's vireo for foraging, nesting or transitory purposes. This potential for nesting exists on the Property within the Southern Willow Riparian Scrub found within the MS4 drainage easement as it contains dense stands of Elderberry (*Sambucus nigra*), Mulefat (*Baccharis salicifolia*) and Gooding's Willow (*Salix gooddingii*).

The location chosen for the Project footprint practices 100% avoidance of the potentially suitable habitat for Least bell's vireo. Given the avoidance factor, focused surveys for Least Bell's vireo are not required under MSCHP Vol 1. App E: Least Bell's Vireo Survey Requirements - Objective 3.

Given a small chance for potential occurrence, however, it is recommended that a pre-construction survey for nesting birds be performed if construction commencement is scheduled to occur during the known avian breeding season for *Vireo belli pusillus*. (April 10th through August 31st). No other impacts are expected to originate from the Proposed Project on Least Bell's Vireo, given the avoidance of the known potentially suitable habitat by the Proposed Project.

Southwestern willow flycatcher (*Empidonax traillii extimus*)

This small riparian-associated migratory bird is listed as both State and Federally endangered, due to loss of critical breeding habitat. Found almost exclusively in or adjacent to thick riparian woodland and scrub, this species prefers dense stands of Willows (*Salix sp*), but will also nest in Boxelder (*Acer negundo*), Tamarisk (*Tamarix sp.*), and occasionally in invasive thickets of Russian Olive (*Elaeagnus angustifolia*). Use of riparian areas during migration also occurs frequently. The range of *E. traillii extrimus* covers the southwest of the United States and northern Mexico, from Lake Mead in southern Nevada and Lake Powell in southern Utah to Southern California streams and rivers. While the current range is similar to historical range, the critical breeding habitat in the southwest has been greatly reduced. Also pressuring the species is breeding location competition, predation and brood parasitism from introduced species such as cats and cow birds. (DOI 2013) Nest sites are distinguished by high willow density and low variability in willow patch size or bush height. Occupied nesting sites always have a dense vegetation in the patch interior and in most cases this dense patch occurs within the first 3-4 meters above the ground (USFWS 2001)

Populations of this criteria species are known from the confluence of Temescal Creek at Prado Flood Control Basin. On the Property, a small portion within the Southern Willow Riparian scrub, provides suitable foraging and nesting habitat for migrating or locally breeding Southwestern willow flycatchers.

No observations of Southwestern willow flycatcher were made during the survey. Cottonwood-willow riparian habitat occurs adjacent to the Property and meet the minimum density of willow species or patch size correlated with this species preferences. All riparian-associated vegetation found on the Property are avoided by the Project Footprint.

Focused surveys are not required for Southwestern willow flycatcher due to the avoidance of the suitable habitat.

Western yellow-billed cuckoo (*Coccyzus americanus occidentalis*)

The Western yellow-billed cuckoo has a more restrictive range and habitat requirements than its eastern kin, with its exclusive breeding habitat being riparian locations of high canopy Cottonwood- willow communities. It has been noted that these Cottonwood and Willow woodlands need at least 100 m wide, with a local foraging area 20 hectares minimum for a breeding pair. The distributional range of this species is wide, covering the southwest United States and down into Mexico and Baja California, They also have been noted along the Pacific coast as far north as British Columbia, but are always restricted to very specific stand types of their preferred habitat during the breeding season. Suitable habitat has decreased dramatically over the past century, leading to a State endangered status and a listing as a candidate for federally endangered status. The largest threat to their habitat are channelization / stream diversion, development of stream beds areas, and introduction of invasive species, including grazing herds of livestock. (BLM 1998)

The Western yellow-billed cuckoo is known from only one general location within the WRMSHCP Plan Area: The Prado Flood Control Basin. In the Santa Ana River flood plain, preferred habitat exists. The CNDDB places this species within the adjacent riparian woodlands to the Property.

There is no suitable habitat for *Coccyzus americanus occidentalis* within the Project footprint and the Southern Willow Riparian scrub on the Property provides marginal suitable habitat. Regardless, the Project avoids this suitable habitat on and near the Property entirely.

The Proposed Project is located within the City of Eastvale which utilizes as a basis the Eastvale Area Plan of the MSHCP, implemented prior to incorporation when the area was under jurisdiction of the County of Riverside. The 2.55 acre Property is not within a designated sub-unit, Cell Group, or Cell as defined by the MSHCP. The Proposed Project is requested to show MSHCP compliance in accordance with criteria to satisfy CEQA, through specific habitat assessments, applicable biological surveys, mitigation, and provisions of MSHCP and CEQA compliance analysis.

5.1 Urban / Wildlands Interface Guidelines

According to Section 6.1.4 of the MSHCP, the Urban / Wildlands Interface Guidelines (UWIG) are intended to address indirect effects associated with locating development in proximity to MSHCP conservation areas. (Riverside County 2003). The Project Property is directly adjacent to a WRMSHCP conservation area: Core A: Prado Flood Control Basin Santa Ana River, so UQIG applies.

Where applicable, general management measures as outlined by MSHCP Section 5.2.1 shall be implemented when necessary. General management measures include proper fencing to reduce public access to the MSHCP conservation area, placing signage to reduce dumping, trespassing, or any other disturbance; and use of non-invasive species and implementing a weed control within the Property helps to reduce invasive species and fire hazard.

General measures implemented, proposed to be implemented, or non-applicable:

1) Control of public access to the MSHCP conservation area using appropriate fencing, gates and signage, trash removal, trespass control in response to illegal dumping, off-road vehicle use and vandalism.

STATUS: IMPLEMENTED.

Existing perimeter fencing inhibits intrusion to the Property from public access points, while provide secure egress. No breaches in the fenceline or CMU walls demarcating Property edges were observed. No signs of vandalism, trespass, or illegal activities on the Property were observed. Signage stating, or stating a similar notice to prevent or reduce illegal activities are posted.

2) Initial baseline assessment of Additional Reserve Lands within the first four years of conveyance of such lands to the MSHCP Conservation Area.

STATUS: NON-APPLICABLE.

Property is not proposed to be conveyed to Conservation area in part or whole. The portion of the Property determined to have sensitive habitat is an integral component of the municipal MS4 system

3) Upland habitats within the MSHCP Conservation Area will be maintained and managed to the extent feasible in a condition similar to or better than the habitat's conditions at the time the lands are conveyed to the MSHCP Conservation Area.

STATUS: NON-APPLICABLE.

Property is not proposed to be conveyed to Conservation area in part or whole. The portion of the Property determined to have sensitive habitat is an integral component of the municipal MS4.

4) Wetland habitat within the MSHCP Conservation Area will be maintained and managed to the extent feasible in a condition similar to or better than the habitat condition at the time the lands are conveyed to the MSHCP Conservation Area.

STATUS: NON-APPLICABLE.

Property is not proposed to be conveyed to Conservation area in part or whole. The portion of the Property determined to have sensitive habitat is an integral component of the municipal MS4.

5) Existing known or newly observed active raptor nests shall be conserved within the Conservation Area.

STATUS: IMPLEMENTATION PROPOSED.

The Property lies directly adjacent to a Core Conservation area containing highly sensitive riparian vegetation communities and potentially listed species.

POTENTIAL ISSUE: Construction activities may disturb, delay or prevent nesting opportunities for listed species or native species that require calm and quiet locations to successfully nest and fledge their young. Disturbance activities are any actions that produce noise, vibration, air or water contamination (even temporary), create dust or smoke, or cause alterations in temperature, light patterns, or other exposure. Grading, grubbing, excavation, heavy equipment use, etc are examples of disturbance producing activities.

RECOMMENDATION:

A Pre-construction survey for nesting is recommended to be implemented as a condition of approval, if construction activities are to commence during the active breeding season (Apr - Aug) . Avoidance measures shall be conditioned by the qualified biologist conducting the pre-construction survey. Typically buffer zones prevent heavy equipment or noise producing activities within 500' of an observed active raptor nests. In accordance with the MTBA, active nesting locations for any avian species shall be similarly given a buffer zone if discovered during the survey. These buffer zones are typically 150' for bird nests and 250' for riparian-associated species' nests.

6) Management activities will be directed toward both existing known Core Areas and species localities as identified in the species conservation objectives as well as new Core Area and localities that may identified in the future.

STATUS: IMPLEMENTED.

Included within this report (Appendix D: Supplemental Attachments) is a "Form for assessment of upland and wetland habitat conditions." The vegetation communities on-site found suitable for any current or potential species conservation objectives found on the Property will be 100% avoided by the proposed Project.

7) Unless otherwise specified in the species-specific conservation objectives, species presence and continued use shall be maintained at 75% of the locations identified for each species in the species accounts, as measured at a minimum once every eight years.

STATUS: REQUIREMENTS MET.

The Proposed Project practices at least 100% avoidance of the identified habitat suitable for all potentially occurring sensitive species on-site.

8) General management efforts will be directed to respond to natural and anthropogenic disturbance regimes, particularly those that may be causing ecosystem state transition (conversion of one habitat type to another).

STATUS: REQUIREMENTS MET.

Most of the Property landscaping has long undergone a state transition from natural community to denuded pastureland and developed residence. State transition from the current state could only improve the state of the Property in regards to habitat development, excepting further introduction or proliferation of invasive species. Already in place is a regimen for clearing and reducing invasive plant species.

9) **In larger habitat blocks within the MSHCP Conservation Area, fire management activities such as prescribed burning may be determined to be desirable to achieve biological goals within the MSHCP Conservation Area**

STATUS: NON-APPLICABLE.

Property is not proposed to be conveyed to Conservation area in part or whole.

Urban Wildlands Interface Guidelines present a number of general issues that may or may not pertain to the Proposed Project. Each section under UWIG is addressed below:

Drainage: The Proposed Project does not propose individual drainage improvements for the Property, as it does not incorporate a significant area coverage of impermeable hardscaping or structural foundation. Within the Proposed CMU enclosure, water may still infiltrate the substrate through proposed gravel groundcover and is intended to shed to existing on-site drainage methods once the water volume exceeds the percolation rate of the soil. The access shall be a crushed granite or gravel pathway that allows for water infiltration as well. Overall, the impermeable area of the Proposed Project is less than 120 sqft. For the technician parking area and any equipment staging area, existing compacted earth areas will be utilized.

Altered watershed patterns originating from the Proposed Project will not adversely affect existing drainage, as additional significant watershed volumes are not expected.

RECOMMENDATIONS: None Required.

Toxics: The Proposed Project does not produce toxic chemicals nor produce volatile organic byproducts. There are no anticipated sources of toxics from the Proposed Project and therefore, no anticipated impacts from toxics to the conservation area.

RECOMMENDATIONS: None Required.

Lighting: The Proposed Project implements lighting in the form of two wall packs installed to illuminate the interior of the CMU enclosure during attendant visitation only. Each wall pack is downlit with shielding. The wall packs are switched at an exterior switch box near the access gate. The monopalm tower does not incorporate lighting, nor is there lighting proposed for the outside of the CMU enclosure. Increased light is not anticipated to affect the conservation area.

RECOMMENDATIONS: None Required.

Noise: The Proposed Project, when finalized, does not incorporate machinery or structural elements that produce adverse noise. The DC generator to be installed is made to operate at minimal noise levels when cycles occur. Meant to be an unmanned facility, the Proposed Project will only produce daytime-hours noise intermittently when being upgraded or serviced.

During construction, there will be temporary noise level increases from personnel, vehicular, and heavy machinery. To reduce impacts from noise the proposed conservation area during this period, construction should be limited to daylight hours and shall not occur if not cleared by a qualified biologist during the known breeding season for birds.

RECOMMENDATIONS: Conduct pre-construction nesting bird survey if commencement is slated to begin during the avian breeding season. Avoid any active nests, should any be found, and follow all pre-construction survey instructions as determined by a qualified biologist.

Invasives: The Proposed Project doesn't incorporate daily vehicular traffic nor a significant increase in foot traffic. The Project Footprint is situated in an area found to be completely within an urban / exotic community that is completely denuded. Invasive plant species largely colonize disturbed areas before expanding into and degrading or displacing natural stands and vegetation communities. Sources of invasive species are often dropped seeds from people, vehicles, and/or animals, or windblown / washed in from adjacent parcels. In addition, many invasive species begin as escaped cultivars or poorly maintained exotic landscape plants. Invasive species within the conservation area may be increased or introduced from invasive species found on the Property. No direct pedestrian or vehicular access connects the Property to the conservation area.

RECOMMENDATIONS: Given there is already an invasive species removal plan in place, the Project shall include non-invasive species, preferably locally native plants fit for the soil and exposure aspects of the Project location, in any landscaping that may be proposed.

5.2 Fee Compliance

Payment of any development fees - such as the fee for filing a "Negative Declaration", compliance with any conditions determined by the City of Eastvale Planning Dept as a result of the Biological Assessment Report, as well as any associated compliance fees with the MSHCP (should any apply) is intended to provide mitigation under the California Environmental Quality Act (CEQA), the National Environmental Policy Act (NEPA), the California Endangered Species Act (CESA), and the Federal Endangered Species Act (FESA).

The following measure, which is a standard condition under the MSHCP, would reduce project related impacts on species covered under the Eastvale Area Plan to less than significant:

MM-1 The Proposed Project applicant shall pay any development mitigation fees associated with the biological assessment in regards the parcel status, if required.

5.2 Criteria Area Species (MSHCP Section 6.1.3)

Burrowing Owl (*Athene cunicularia hypungea)*

ISSUE: The Property is within a designated area for initial surveys for Burrowing Owl.

CONSIDERATION: A habitat assessment was conducted to determine potential presence and the suitability of habitat in regards to Burrowing Owl on the Property, especially in regards to areas of direct impact by the proposed Project. No suitable habitat was determined to occur on the Property, and no sightings, nor observances of presence were found on the Property. Based on this determination, it was deemed unnecessary to initiate Phase I Burrowing Owl surveys within a 500' extended buffer survey area about the Property.

MEASURE: Phase II surveys are not required for *Athene cunicularia hypungea.*
No further measures are required.

Smooth Tarplant (*Centromadia pungens ssp. laevis*)

ISSUE: The Property is within a designated are for in-season focused surveys for Smooth Tarplant, if suitable habitat is determined to occur.

CONSIDERATION: A habitat assessment was conducted to determine potential presence and the suitability of habitat in regards to Smooth Tarplant on the Property, especially in regards to areas of direct impact by the proposed Project. Based on this determination, it was deemed unnecessary to request an in-season focused survey for the species.

MEASURE: Focused surveys are not required.
No further measures are required.

Ch. 6.0 SUMMARY / CONCLUSION

Following MSHCP consistency analysis measures under the Eastvale Area Plan, which have been adopted as a guide for the City of Eastvale, and using data gathered from a habitat assessment survey for general biological resources known to, or suspected to, occur in the proposed Project locality; it was determined that the proposed Project does not significantly impact the limited biological resources that were found on the Property.

The proposed Project consists of construction of an unmanned wireless cell site for Verizon Wireless, Inc., which includes a 323 sqft lease area where the cell tower and CMU perimeter compound are proposed. Also included are an unpaved 20' wide access easement, unpaved technician parking space and underground utility connections. The proposed Project parcels (Property) are located within the City of Eastvale, on two parcels totaling together 2.55 acres identified by APNs 130-070-018 (south parcel) and 130-070-019 (north parcel). The address for the Property is 8306 Grapewin St., Eastvale CA 92880.

The Property was surveyed on December 16, 2015. The conditions on the Property were determined to be primarily developed around an existing residence, and denuded pastureland of bare, compacted earth showing little vegetative cover, with sparse native plant instances. MSHCP community affiliations for these areas are: Residential / Urban / Exotic: Developed, Landscaping, & Denuded pastureland. None of these classifications are considered biologically sensitive and are unranked under CNPS Phytocoenosis rankings for native vegetation communities. A small patch of riparian scrub was determined to be of value in the northeast corner of the north parcel, where a drainage easement outlets stormwater from the local MS4 into the Santa Ana River flood plain. This area is disturbed and isolated from the rest of the Property by a CMU wall and fencing. This area was determined to be classified as Southern Willow Riparian Scrub: Black Willow Series, ranked as G3 S3 under CNPS vegetation community rankings. Despite the disturbed nature, it was determined that this area has biological value and avoidance measures are implemented to maintain the presence of this community. No impacts are anticipated to this potentially sensitive area.

No direct impacts are expected to affect neighboring parcels in regards to biological resources. Immediately adjacent to the Property is a conservation area Core A: Santa Ana River / Prado Flood Control Basin. This area shows open water, highly sensitive riparian forest, woodlands, marsh, wetlands and riparian scrub that provides suitable habitat for a number of listed species as well as provides a wildlife corridor and nesting grounds for a large number of native wildlife. In direct impacts that may affect this sensitive riparian habitat are determined to be construction activities that may disturb nesting birds during the breeding season (April 1 through August 15)

In regards to Riparian / Riverine resources (and Wetlands), geological and hydrological conditions do not exist on the Property itself to substantiate the occurrence of such designations. No vernal pool criteria was confirmed to establish suitability for vernal pool habitat. The field survey was conducted following a recent minor rain event, performed around the start the rainy season for inland Southern California.

No suitable habitat for any listed species, nor Criteria Area Species was determined to be present in the area of the proposed Project footprint.

Suitable habitat was found nearby for a handful of listed species including Least bell's Vireo, Southwestern Willow flycatcher, Western Yellow-billed cuckoo, Santa Ana sucker, and a number of California Species of Special Concern. Habitats suitable for these sensitive species are not anticipated to be impacted by the proposed Project, given measures as described within this report are conditioned or otherwise followed.

Given the results and findings recorded on the Property and immediate environs, the above recommendations for mitigation measures within this report are deemed acceptable for providing a less-than-significant impact determination pursuant to CEQA. With payment of any development mitigation fees as determined by the City of Eastvale and potentially conducting an in-season pre-construction survey for nesting birds, the Proposed Project shall fulfill the requirements related to biological resources pursuant to CEQA, FESA, NEPA, CESA, and the MSHCP.

Ch. 7.0 CERTIFICATION

I hereby certify that the statements furnished above and in the attached figures present data and information required for the habitat assessment and that the facts, statements, and information presented in the habitat assessment are true and correct to the best of my knowledge and belief.

Consultant: Justin Daniel, Consulting Biologist

Signed: _____ Date: 02/22/16

REFERENCES

AOU. American Ornithological Union.
American Ornithologists' Union Checklist of North American Birds. 2013

Baker, R. J., L. C. Bradley, R. D. Bradley, J. W. Dragoo, M. D. Engstrom, R. S. Hoffmann, C. A. Jones, F. Reid, D. W. Rice, and C. Jones
2003 Revised Checklist of North American Mammals North of Mexico. Occasional Papers, Museum of Texas Tech University 229:1-24.

Baldwin, B. G., D. Goldman, D. Keil, R. Patterson. T.J. Rosatti
The Jepson Manual: Vascular Plants of California, Second Edition
University of California Press 2012, updated online inventory December 2015

CALFLORA California Floral Database http://www.calflora.org/
Online botanical reference resource
Cal State University, Berkeley Accessed December 29, 2015

CEQA California Environmental Quality Act Significance Determination Thresholds. January 2012

CEQA California Environmental Quality Act http://resources.ca.gov/ceqa/
California Natural Resources Agency 2014

CNPS California Native Plant Society http://www.rareplants.cnps.org/
Rare and Endangered Plant Inventory of California (online edition v8-02).
Rare Plant Scientific Advisory Committee, D. P. Tibor, Convening Editor.
Sacramento, California. Rare Plant Program 2015

CNPS Sawyer, John, T. Keeler-wolf, J. Evans
A Manual of California Vegetation, Second Edition 2009
California Native Plant Society

California Invasive Plant Council; 2000. Invasive Plants of California's Wildlands.
Carla C. Bossard, John M. Randall, Marc C. Hoshovsky, University of California Press

CDFW California Natural Diversity Data Base CNDDB, CDFG Natural Heritage Division,
RareFind 3 Application, Sacramento. Accessed December 30, 2015
http://www.dfg.ca.gov/biogeodata/cnddb/mapsanddata.asp

CDFW State and Federally Listed Endangered, Threatened Animals of California.
The Resources Agency, California Department of Fish and Wildlife. 2015

CDFW Special Vascular Plants, Bryophytes, and Lichens List.
Natural Diversity Database. California Department of Fish and Wildlife 2015.

CDFW State and Federally Listed Endangered, Threatened, and Rare Plants of California.
The Resources Agency, California Department of Fish and Wildlife. 2015

County of Riverside Transportation and Land Management Agency (RCTLMA)
Riverside County GIS service http://tlmabld5.agency.tlma.co.riverside.ca.us/website/rclis/
accessed 12/17/15

County of Riverside Environmental Programs Department. 2006.
Burrowing Owl Survey Instructions for the
Western Riverside Multiple Species Habitat Conservation Plan Area, March 29, 2006.

Collins, J.T. & Taggert, T.W. 2009 *Standard Common and Current Scientific Names for North American Amphibians, Turtles, Reptiles and Crocodilians*. 6th edition. CNAH. Kansas.

DOI Department of the Interior
Endangered and Threatened Wildlife and Plants:
Designation of Critical Habitat for Southwestern Willow Flycatcher.
Federal Register Vol 78 No. 2 January 2013 – Rules and Regulations

Gibbs, T.J., C. Y. Osteo
Arthropod Collection and Identification: Laboratory and Field Techniques, First Edition
Associated Press 2005

Google Inc. Google Earth Application https://www.google.com/earth/
Satelite imagery of Property taken 04/27/14. Accessed 12/17/15.

Holland, R. F. 1986. Preliminary Descriptions of the Terrestrial Natural Communities of California. Non-game Heritage Program, State of California Department of Fish and Game, Sacramento, CA. 157 pp.

Inglett, P. W., Reddy K. R., Corstanje R. 2005. Encyclopedia of Soils in the Environment. Academic Press. Anaerobic Soils pp. 72-78.

Jennings, M. R. 1994. An Annotated Checklist of the Amphibians and Reptiles of Southern California. California Department of Fish and Game

Laymon, Stephen A. Wildlife Ecologist University of California, Riverside
Bureau of Land Management (BLM) Species Profile – Yellow-billed Cuckoo
Report for West Mojave Planning Area 1998

Patten, Micheal A. Department of Biology University of California, Riverside
Bureau of Land Management (BLM) Species Profile – Least Bell's Vireo
Report for West Mojave Planning Area 1998

Roth, O. 2009 Journal of Animal Ecology Vol. 76 issue 2. British Ecological Society.

Stebbins, R. C. 2003. *Field Guide to Western Reptiles and Amphibians*
Houghton Mifflin Co., Boston.

U.S. Department of Agriculture (USDA)
1973 *Soil Survey, Eastvale, California.* Soil Conservation Service and Forest Service.
Roy H. Bowman, ed. Western Riverside County.
Web Soil Survey: http://websoilsurvey.sc.egov.usda.gov/App/HomePage.htm

U.S. Geological Service (USGS)
1981 "Corona North Quad, CA 7.5-minute series topographic map. Photoinspected 1978.

USFWS. U.S. Fish and Wildlife Service. 2015.
U.S. Endangered, Threatened and Candidate Plant and Animal Species by
State and Lead Region. U.S. Department of the Interior.
United States Fish and Wildlife Service Threatened and Endangered Species System

Wilson, E. & Reeder, D.M. 2005 *Mammal Species of the World.*
A Taxonomic and Geographic Reference. 3rd edition. Hopkins Univ Press.

WRMSHCP Western Riverside County Multiple Species Habitat Conservation Plan 2003
Dudek & Associates (Prime MSHCP Consultant) County of Riverside.

APPENDIX A VASCULAR PLANT LIST

HABITAT TYPE

A = Developed / Disturbed: Developed & Landscaping
B = Developed / Disturbed: Denuded pastureland
C = Riparian Scrub: Southern Willow Scrub: Black willow series

FREQUENCY		COVER
highest	abundant	> 20%
high	frequent	+/-10-20%
moderate	common	+/- 5-10%
less than mod	occasional	+/- 1-5%
few	uncommon	< 1%
single example	rare	

TYPES

A = Annual	P = Perennial	Bi = Biennial	T = Tree	S = Shrub
H = Herbaceous	F = Fern	Br = Bryophyte	Su = Succulent	G = Grass
	E = Evergreen	Aq = Aquatic	D = Deciduous	

Scientific names mostly follow: The Jepson Manual, (2nd ed., 2012, rev 2015), or Flora of Southern CA (Munz, 1974)
Recent adoptions of name changes apply. Both taxa are displayed if applicable.
* - exotic plant taxon, + - incidental or peripheral plant sp.

FAMILY/ SCIENTIFIC NAME	COMMON FAMILY / NAMES	TYPE	A: Developed / Landscaping	B: Denuded Pastureland	C: Riparian Scrub	Native	Cal IPC
ADOXACEAE	**Moschatel Family**						
Sambucus nigra	Black elderberry	T		uncommon	rare	Y	-
AMARANTHACEAE	**Amaranth Family**						
Amaranthus albus	Pigweed amaranth	AH		uncommon			
ARECACEAE	**Palm Family**						
Phoenix canariensis	Canary Island date palm	T	uncommon				Limited
Washingtonia robusta	Mexican fan palm	T		uncommon	uncommon		Limited
ASPARAGACEAE	**Asparagus Family**						
Asparagus densiflorus	Foxtail fern	PH	uncommon				
ASTERACEAE	**Sunflower Family**						
Baccharis salicifolia	Mulefat	S			uncommon	Y	
Conyza [Erigeron] canariensis	Horseweed	AH		uncommon			
Lactuca serriola	Prickly lettuce	AH		uncommon			
Sonchus oleraceus	Common sow thistle	AH		uncommon			
BIGNONIACEAE	**Bignonia Family**						
Chilopsis linearis	Desert willow	S		rare		Y	

FAMILY/ SCIENTIFIC NAME	COMMON FAMILY / NAMES	TYPE	A: Developed / Landscaping	B: Denuded Pastureland	C: Riparian Scrub	Native	Cal IPC
BRASSICAEAE	**Mustard Family**						
Brassica nigra	Black mustard	AH		uncommon	uncommon		Moderate
Hirschfeldia incana	Wild mustard	AH			uncommon		Moderate
BUXACEAE	**Box Family**						
Buxus sps.	Boxwood hedge	S	uncommon				
CAPRIFOLIACEAE	**Honeysuckle Family**						
Lonicera sp.	Honeysuckle	S	uncommon				
CHENOPODIACEAE	**Goosefoot Family**						
Chenopodium album	Lambsquarters	AH	uncommon				
Salsola australis	Russian Thistle	AH		uncommon			Limited
Salsola tragus	Tumbleweed	AH	uncommon	occasional			Limited
CONVOLVULACEAE	**Bindweed Family**						
Calystegia sepium	Western hedge bindweed	PH V			rare	Y	
CUCURBITACEAE	**Gourd Family**						
Cucurbita palmata	Coyote melon	PH			uncommon	Y	
CUPRESSACEAE	**Cypress Family**						
Cupressus sempervirens	Mediterranean cypress	T	uncommon				
ELAEAGNACEAE	**Oleaster Family**						
Eleagnus angustifolia	Russian olive	T	uncommon				Limited
ESCALLONIACEAE	**Escallonia Family**						
Escallonia sp.	Escallonia hedge	S	uncommon				
EUPHORBIACEAE	**Spurge Family**						
Euphorbia maculata	Spotted spurge	AH	occasional	uncommon			
Euphorbia polycarpa	Smallseed sandmat	AH		uncommon		Y	
Euphorbia albomarginata	Rattlesnake sandmat	AH		occasional		Y	

FAMILY/ SCIENTIFIC NAME	COMMON FAMILY / NAMES	TYPE	A: Developed / Landscaping	B: Denuded Pastureland	C: Riparian Scrub	Native	Cal IPC
GERANIACEAE	**Geranium Family**						
Erodium brachycarpum	Foothill filaree	AH		uncommon			
Erodium cicutarium	Red stem filaree	AH	uncommon	occasional			Limited
JUNCACEAE	**Rush Family**						
Juncus effusus ssp. austrocalifornicus	Common bog rush	PG			uncommon	Y	
MALVACEAE	**Mallow Family**						
Malva parviflora	Cheeseweed	AH		occasional			
MORACEAE	**Mulberry / Fig Family**						
Ficus carica	Common fig	T			uncommon		Moderate
PINACEAE	**Pine Family**						
Pinus sylvestris	Scots pine	T	uncommon				
PITTOSPORACEAE	**Pittosporum Family**						
Pittosporum undulatum	Victorian boxtree	T	common				
PLATANACEAE	**Plane Tree Family**						
Platanus x acerfolia	London Planetree	T	uncommon				
POACEAE	**True Grass Family**						
Arundo donax	Giant reed	PG			uncommon		High
Cynodon dactylon	Bermudagrass	PG			uncommon		Moderate
Digitaria sanguinalis	Hairy Crabgrass	PG	occasional	rare	uncommon		
Festuca arundinacea	Tall fescue	PG	abundant				Moderate
Lolium perenne	Perennial ryegrass	AG	occasional		uncommon		Moderate
Phalaris minor	Littleseed canarygrass	AG			uncommon		
ROSACEAE	**Rose Family**						
Photinia x fraseri	Red tip photinia	S	occasional		uncommon		
RUTACEAE	**Citrus Family**						
Citrus sps	Citrus fruit cultivars	T / S	uncommon				

FAMILY/ SCIENTIFIC NAME	COMMON FAMILY / NAMES	TYPE	A: Developed / Landscaping	B: Denuded Pastureland	C: Riparian Scrub	Native	Cal IPC
SALICACEAE	**Willow Family**						
Populus fremontii	Fremont Cottonwood	T	rare		uncommon	Y	
Salix gooddingii	Gooding's black willow	T			common	Y	
SOLANACEAE	**Nightshade Family**						
Nicotiana glauca	Tree tobacco	S		uncommon	uncommon		Moderate
Solanum nigrum	Garden nightshade	AH		uncommon			
STRELITZIACEAE	**Bird of paradise Family**						
Strelitzia reginae	Bird of Paradise	S	common				
TYPHACEAE	**Cat-tail Family**						
Typha latifolia	Common cattail	PH Aq			uncommon	Y	
URTICACEAE	**Nettle Family**						
Urtica dioica	Stinging nettle	PH			uncommon	Y	
VITACEAE	**Grape Family**						
Vitis girdiana	Southern Calif. grape	V			uncommon	Y	

APPENDIX B WILDLIFE LIST

SCIENTIFIC NAME	COMMON NAME	NOTES & ID METHOD	#	
CLASS AVES - BIRDS				
ACCIPITRIDAE	**Hawks & Eagles Family**			
Buteo jamaicensis	Red-tailed Hawk	Two adults, flying separately along river, Sight & Call	2	
Circus cyaneus	Northern Harrier	Solitary in flight over Santa Ana River, Sight – juvenile	1	
ANATIDAE	**Duck & Goose Family**			
Anas strepera	Gadwall	Small flock on Santa Ana River, Sight – breeding plumage	6	
Bucephala clangula	Common goldeneye	Flock on Santa Ana River, Sight – breeding plumage & grunting	10	
ARDEIDAE	**Heron & Egret Family**			
Bubulcus ibis	Cattle Egret	Small flock along River, transitory Sight	3	
Egretta thula	Snowy Egret	Solitary bird on Santa Ana River bank Sight	1	
CHARADRIIDAE	**Plovers & Lapwing Family**			
Charadrius vociferus	Killdeer	Solitary bird on Property Sight & Call	1	
COLUMBIDAE	**Pigeon & Dove Family**			
Zenaida macroura	Mourning Dove	Pair transient on Property Sight * Deceased individual observed showing recent signs of predation by domestic feline.	3*	
CORVIDAE	**Jay & Crow Family**			
Corvus brachyrhynchos	American Crow	Small flock - flight over Property Sight	4	1
EMBERIZIDAE	**Sparrow Family**			
Melospiza melodia	Song Sparrow	Flock foraging in scrub and trees Sight & Song	14+	
Melozone crissalis	California Towhee	Individual on adjacent parcel fence, Sight	1	
FRINGILLIDAE	**Finch Family**			
Haemorhous purpureus	Purple Finch	Small flock on adjacent parcel Sight & Call	12+	
ICTERIDAE	**Orioles, Grackles & Cowbirds Family**			
Euphagus cyanocephalus	Brewer's Blackbird	A few birds in flight over Property, Sight	3	

MIMIDAE	**Thrasher & Mockingbird Family**		
Mimus polyglottos	**Northern Mockingbird**	**Solitary bird on adjacent property Sight & Call**	**1**
RALLIDAE	**Rail Family**		
Fulica americana	**American Coot**	**Small flock in Santa Ana River, Sight & Call notes – foraging amongst reeds**	**4**
Gallinula galeata	**Common Gallinule**	**Pair in Santa Ana River, Sight & Call notes – foraging amongst reeds**	**2**
REGULIDAE	**Kinglet Family**		
Regulus satrapa	**Golden-crowned Kinglet**	**Small flock within Riparian scrub, Sight & Song**	**5**
TROCHILIDAE	**Hummingbird Family**		
Calypte anna	**Anna's hummingbird**	**Individual on adjacent parcel Sight**	**1**
TROGLODYTIDAE	**Wren Family**		
Cistothorus palustris	**Marsh Wren**	**Calls from within riparian woodland, Song**	**1+**
TYRANNIDAE	**Tyrant Flycatcher Family**		
Empidonax hammondi	**Hammond's Flycatcher**	**Small flock in adjacent willow scrub Sight & Song**	**5+**
Sayornis nigricans	**Black Phoebe**	**Pair on Property and adjacent, foraging Sight**	**2**
Sayornis saya	**Say's Phoebe**	**Solitary on Property, Sight**	**1**

CLASS MAMMALIA - MAMMALS

LEPORIDAE	**Rabbit & Hare Family**		
Sylvilagus audubonii	**Desert Cottontail**	**Sighted on adjacent prop Sight & Scat**	**1**

CLASS REPTILIA - REPTILES

No species within this Class were observed during surveys. This does not preclude a representative species from presence upon the subject parcel. Suitability of habitat found upon subject parcel discussed for any listed species or Species of Concern within report, should any apply.

CLASS AMPHIBIA - AMPHIBIANS

No species within this Class were observed during surveys. This does not preclude a representative species from presence upon the subject parcel. Suitability of habitat found upon subject parcel discussed for any listed species or Species of Concern within report, should any apply.

APPENDIX C SITE PHOTOGRAPHS

PHOTO # 01: GRAPEWIN #1 VIEW: E

Taken from Property line at Grapewin St, where the north parcel (left) and south parcel (right) meet. Existing residence and driveway partially shown with access gate to denuded pasture also partially shown.

PHOTO # 02: GRAPEWIN #2 VIEW: NE

Taken from the same vantage point as Photo #01 above, this captures the north parcel access and better shows the character of the parcel. The block wall seen beyond the fence line demarcates the MS4 easement boundary.

PHOTO # 03: FLOOD CONTROL EASEMENT #1 VIEW: E

From Grapewin St. viewing east, this is the entry gate for the flood control easement. The sign posted states "TRESPASSING – LOITERING FORBIDDEN BY LAW POSTED PROPERTY CALIF. PENAL CODE SECTION 555 RIVERSIDE COUNTY FLOOD CONTROL AND WATER CONSERVATION DISTRICT."

PHOTO # 04: FLOOD CONTROL EASEMENT #2 VIEW: E

Pictured is the top lip of the Concrete Pipe spillway of the MS4 as it pours into the outlet basin within the easement on the Property. Shown are a few native Gooding's black willows (*Salix goodinggii*) that have recolonized this disturbed area. This area is considered to be riparian scrub, as the dominant cover here are riparian associated shrubs such as Mulefat (*Baccharis salicifolia*), with a few small trees. This outlet basin connects directly to the Santa Ana River / Prado Flood Control Basin just beyond the trees pictured to the east.

PHOTO # 05: FLOOD CONTROL EASEMENT #3 VIEW: NE

From the outlet basin, this photo shows the engineered placement of the riprap flood velocity diffuser and the recolonized riparian habitat found within. This photograph was taken as close to the NorthEast Property corner as possible and still obtain a clear picture of the habitat within. The willow thickets here provide 80%+ canopy cover.

PHOTO # 06: PROPERTY #1 VIEW: N

First in the series of the Property, this is taken from the south edge of the proposed Project footprint (site) viewing north towards the Riparian habitat shown in Photo #05. A 6' CMU wall separates the easements from the rest of the north parcel. There are poles demarcating the Property line between the parcels, but no fencing. To the extreme right, the riparian forest / woodlands of the Santa Ana River are apparent.

PHOTO # 07: PROPERTY #2 VIEW: NW

From just south of the Proposed Project footprint (site), this shot views across the Property as a whole, viewing towards Grapewin St. and the access entry. This photo exemplifies the denuded nature of the Property. Small stands of weeds are the primary vegetative cover, making up less than 2% of the area.

PHOTO # 08: PROPERTY #3 VIEW: W

Again from just south of the proposed footprint, this spanning shot pictures the rear of the residence and peers somewhat into the adjacent lot. The south parcel is completely developed or denuded to keep down weeds. Tumbleweed (*Salsola sps.*) and Pigweed (*Amaranthus sps*) intrude into the parcel from the south.

PHOTO # 09: PROJECT FOOTPRINT #1 VIEW: SW

Taken from the eastern edge of the Property, looking back onto the proposed Monopalm lease area for the Proposed Project. The tree on the ridge on the left is a single Black elderberry (*Sambucus nigra*). The center of the Project lease area location is roughly the center of this this photograph.

PHOTO # 10: PROJECT FOOTPRINT #2 VIEW: NE

From the southern Property line, this shows the site location where the Monopalm and lease area portion of the Project is to be located in the foreground. Beyond, the edge of the terrace embankment delineates roughly where the Property's eastern portion drops into the flood plain below. Beyond is the Santa Ana River, whose make up is highly sensitive riparian woodlands, riparian forests, freshwater marsh, and open waters.

PHOTO # 11: PROJECT FOOTPRINT #3 VIEW: E

Another shot or the proposed Monopalm lease area location, center shot. This photo also exemplifies the denuded nature of the pasture the Project is to be placed within.

PHOTO # 12: PROPERTY #4 / PROJECT FOOTPRINT #4 VIEW: E

Taken from a graded pad on the north parcel viewing east towards the Santa Ana River and the City of Norco beyond, this shot shows the odd patches of cheeseweed mallow (*Malva parviflora*) on the Property, the direction of watershed flow via the natural drainage channel, the CMU wall denoting the easement boundary, and the relative area of the Project footprint below the elderberry tree breaking up the horizon line on the right side.

PHOTO # 13: PROPERTY #5 / PROJECT FOOTPRINT #5 VIEW: E

The access gate for the proposed Project, showing the main drive entry at Grapewin St. from inside the north parcel. Also shown is the existing residence on the left and the planned communities beyond Grapewin St. Again, the CMU wall denoting the easement line for the Flood control portion is seen on the right.

PHOTO # 14: FLOOD PLAIN #1 VIEW: S

From near the eastern Property line, atop the embankment before it plunges to the flood plain below, this shows the steep drop to more sensitive habitats towards the east. Pictured is an open water freshwater marsh of slow moving water from the Santa Ana River.

PHOTO # 15: FLOOD PLAIN #2 VIEW: E

From the rear of the Property at the eastern Property line, this shot takes in the full of the Southern Cottonwood – Willow Riparian woodland adjacent to the Property. The thick understory shown is ideal habitat for a number of riparian associated species, a number of them listed such as Western yellow-billed cuckoo, Southwestern willow flycatcher, and Least Bell's Vireo.

PHOTO # 16: FLOOD PLAIN #3 VIEW: N

Again from just west of the eastern Property line, this shot pictures the outlet of the MS4 letting into the Santa Ana River basin. The rear fence on the Property is plainly shown and the riparian woodlands on the right side of the picture. Evidence of disturbance by invasive species here is also evident, as a large patch of invasive Giant reed (*Arundo donax*) is shown on the edge of the flood plain.

APPENDIX D SUPPLEMENTAL ATTACHMENTS

FORM FOR ASSESSMENT OF UPLAND AND WETLAND HABITAT CONDITIONS

Date: January 6, 2015

Location: 8306 Grapewin St. Eastvale, CA 92880

Township: T3S Range: R7W Section 2

General Habitat Description: Southern Willow Riparian Scrub: Black Willow Series

Note: Estimate percentage cover for each quarter- section.

1. Shrub species density estimate: high____, medium__X__, low____

Dominant species: ***Salix goodinggii 15-20%***

2. Shrub species diversity: 1 to 3__X__, 4 to 6____, >6____.

Density estimate: high____, medium____, low__**X**__

Dominant species: ***Baccharis salicifolia 5-10%***

3. Annual species density estimate: high____, medium____, low__**X**__

Dominant species: ***Phalaris minor 3-5%***

4. Perennial grasses density estimate: high____, medium____, low__**X**__

Dominant species: ***Arundo donax 5-10%***

5. Soils description: **Ramona fine sandy loam, Terrace escarpment (Sandy loam)**

6. Percentage cover rocks and boulders: ***50-60%*** **drainage velocity diffuser rocks**

7. Presence of stream channels: **No natural channels, contains seasonal stormwaters.**

8. Evidence of periodic flooding present: **Yes**

9. Slope/aspect: **2-5%**

10. Elevation: **843 ft (257 m) amsl**

Existing Disturbance Regime:

Off-road vehicle use: **None observed**

Horse or foot traffic: **None observed**

Dog/cat activity: **Evidence of feline predation on Mourning Dove. Feathers and partially dismembered corpse observed on embankment with recent signs of incomplete consumption.**

Garbage dumping: **Litter and debris present from drainage pipe. Water-borne litter deposited originating from storm water system. No signs of illegal dumping.**

Sedimentation or erosion: **No significant evidence of either. Sediment appears controlled by rock diffuser and make up of soil cover is mostly leaf litter from deciduous and dead shrubs and trees.**

Fire: **No evidence observed or recorded within past 10 years.**

Exotic plant or animal species: **Eight Cal-IPC recognized Invasive plants within community. Listed per Vascular Plant List.**

Disturbed habitat: **YES, engineered storm-water drainage outlet with diffuser basin before discharge into Prado Flood Control Basin.**

Recommendations: No recommendations. Habitat separated from proposed Project by easement and boundary CMU wall. 100% avoidance of community implemented.

Preparer: Justin T. Daniel, BS Natural Resource Mgmt, Senior Biologist

02/22/16

ATTACHMENT 8

DEVELOPMENT PLANS

GRAPEWIN

MTX44-BSC13
MCE
8306 GRAPEWIN STREET
EASTVALE, CA 92880

OVERALL HEIGHT
50'-0"

PROJECT TEAM

SITE ACQUISITION
SAC WIRELESS
5015 SHOREHAM PLACE, SUITE 150
SAN DIEGO, CA 92122
PROJECT MANAGER: JENNIFER CHESNEY-DREW
NUMBER: (949) 235 6262
ZONNING CONTACT: DAIL RICHARD
NUMBER: (858) 200-6541
LEASING MANAGER: BRIANNA NOLER
NUMBER: (760) 900-6034

ARCHITECT/PLANNING/PROFESSIONAL ENGINEER:
W-T COMMUNICATIONS DESIGN GROUP, LLC
8560 S. EASTERN AVE. SUITE #220
LAS VEGAS, NV 89123
DIRECTOR: RYAN GROSS
NUMBER: (702) 998-1012
PROJECT MANAGER: MARICELLA RODRIGUEZ
NUMBER: (702) 998-1007

SURVEYOR:
DIAMONDBACK LAND SURVEYING
5506 FORT APACHE RD SUITE 210
LAS VEGAS, NV 89126
CONTACT: RON COX
TELEPHONE: (702) 823-3257

UTILITY COORDINATOR:
VINCULUMS SERVICES, INC.
10 PASTEUR, SUITE 100
IRVINE, CA 92618-3815
CONTACT: SCOTT CLOUGH
TELEPHONE: (949) 633-6351

VERIZON WIRELESS SIGNATURE BLOCK

DISCIPLINE:	SIGNATURE:	DATE:
RE VENDOR:		
A&E VENDOR:		
A&E COORDINATOR:		
UTILITY VENDOR:		
RF:		
RE:		
CE:		
EE:		
TRANSPORT:		

PROJECT DESCRIPTION

THIS PROJECT IS A VERIZON WIRELESS UNMANNED TELECOMMUNICATION WIRELESS FACILITY. IT WILL CONSIST OF THE FOLLOWING:

- PROPOSED 50'-0" HIGH STEALTH ANTENNA STRUCTURE
- PROPOSED 19'-0"X17'-0" SPLIT-FACE BLOCK TEXTURE WALL COMPOUND TOTAL (± 323 SQ.FT.)
- (2) PROPOSED MCE CABINETS ON CONCRETE PAD
- (12) PROPOSED PANEL ANTENNAS ON PROPOSED SECTOR FRAMES
- (12) PROPOSED RRU's ON PROPOSED SECTOR FRAMES
- (2) PROPOSED RAYCAP BOXES ON PROPOSED SECTOR FRAMES
- (1) PROPOSED PARABOLIC ANTENNA ON PROPOSED TOWER
- (2) PROPOSED GPS ANTENNA ON PROPOSED EQUIPMENT CABINET
- PROPOSED 100AMP VERIZON WIRELESS POWER SERVICES WITH (1) PROPOSED 100AMP METER
- CONNECTION AS REQUIRED FOR POWER AND TELCO SERVICES
- DC & FIBER CABLES ROUTED ON INSIDE OF TOWER
- (1) PROPOSED STANDBY GENERATOR
- PROPOSED 2'X3' PULL BOX FOR POWER (EVERY 300')
- PROPOSED 17"X30" PULL BOX FOR FIBER (EVERY 300')

VICINITY MAP

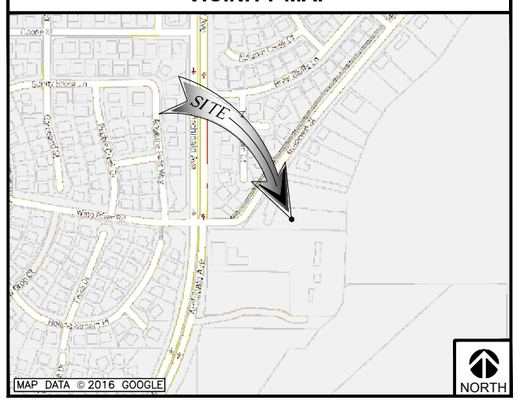

DRIVING DIRECTIONS

FROM: VERIZON OFFICE

TO: 8306 GRAPEWIN STREET
EASTVALE, CA 92880

STARTING FROM VERIZON WIRELESS IRVINE OFFICE:
HEAD SOUTHEAST TOWARD SAND CANYON SIDE PATH/SAND CANYON TRAIL. TURN RIGHT ONTO SAND CANYON AVE. TURN LEFT AT THE 1ST CROSS STREET ONTO BARRANCA PKWY. TURN RIGHT ONTO PACIFICA. TURN RIGHT ONTO THE STATE HIGHWAY 133 N RAMP THEN MERGE ONTO CA-133 N. KEEP RIGHT AT THE FORK TO STAY ON CA-133 N. MERGE ONTO CA-241 N. TAKE THE EXIT ONTO CA-91 E TOWARD RIVERSIDE. TAKE THE LINCOLN AVENUE EXIT. TURN RIGHT ONTO S LINCOLN AVE. TURN LEFT ONTO RIVER RD THEN CONTINUE ONTO ARCHIBALD AVE. TURN RIGHT ONTO GRAPEWIN ST. DESTINATION WILL BE ON THE RIGHT.

ARRIVE AT: 8306 GRAPEWIN STREET CORONA, CA 92880.

PROJECT SUMMARY

APPLICANT/LESSEE
verizon
15505 SAND CANYON AVENUE, D1
IRVINE, CA 92618
OFFICE: (949) 286-7000

APPLICANT'S REPRESENTATIVE
SAC WIRELESS
5015 SHOREHAM PLACE, SUITE 150
SAN DIEGO, CA 92122
PROJECT MANAGER: JENNIFER CHESNEY-DREW
NUMBER: (949) 235 6262

PROPERTY OWNER:
THE ROMAN CATHOLIC BISHOP OF SAN BERNARDINO, A CORPORATION SOLE
1201 HIGHLAND AVENUE
SAN BERNARDINO, CA 92404
CONTACT: MARY DYALL
NUMBER: (951) 682-8751

PROPERTY INFORMATION:
SITE NAME: GRAPEWIN
SITE ADDRESS: 8306 GRAPEWIN STREET
EASTVALE, CA 92880
JURISDICTION: CITY OF MURRIETA

CONSTRUCTION INFORMATION
AREA OF CONSTRUCTION: GROUND (±323 SQ.FT.)
OCCUPANCY: B/U
TYPE OF CONSTRUCTION: IIB
CURRENT ZONING: LIGHT AGRICULTURAL (A1)
ADA COMPLIANCE: FACILITY IS UNMANNED AND NOT FOR HUMAN HABITATION. MACHINERY SPACES ARE EXEMPT FROM ACCESSIBILITY REQUIREMENTS PER THE CBC SECTION 11B-203.5.

ASSESSOR'S PARCEL NUMBER
APN: 130-070-018

TOWER OWNER:
verizon
15505 SAND CANYON AVENUE, D1
IRVINE, CA 92618
OFFICE: (949) 286-7000

GENERAL CONTRACTOR NOTES

DO NOT SCALE DRAWINGS

CONTRACTOR SHALL VERIFY ALL PLANS AND EXISTING DIMENSIONS AND CONDITIONS ON THE JOB SITE AND SHALL IMMEDIATELY NOTIFY THE ARCHITECT IN WRITING OF ANY DISCREPANCIES BEFORE PROCEEDING WITH THE WORK OR BE RESPONSIBLE FOR THE SAME.

STRUCTURAL NOTE

NOTE:
W-T'S SCOPE OF WORK DOES NOT INCLUDE A STRUCTURAL EVALUATION OF THIS TOWER OR STRUCTURE. AN ANALYSIS OF THE TOWER OR STRUCTURE HAS BEEN PERFORMED BY VECTOR ENGINEERS DATED SEPTEMBER 8, 2015 THE ANTENNAS AND EQUIPMENT SHOWN ON THIS PLAN ARE FOR REFERENCE ONLY AND THE HEIGHT, LOCATION AND MOUNTING SHOWN IN THE STRUCTURAL ANALYSIS SHALL SUPERSEDE THESE DRAWINGS.

CODE COMPLIANCE

- 2013 CALIFORNIA ENERGY CODE
- 2013 CALIFORNIA BUILDING CODE
- 2013 CALIFORNIA ELECTRICAL CODE
- 2013 CALIFORNIA FIRE CODE
- 2013 CALIFORNIA GREEN BUILDING CODE
- 2013 CALIFORNIA MECHANICAL CODE
- 2013 CALIFORNIA PLUMBING CODE
- 2013 NATIONAL FIRE ALARM CODE
- 2013 SPRINKLER CODE

SHEET	DESCRIPTION	REV
T-1	TITLE SHEET & PROJECT DATA	6
SP-1	GENERAL NOTES	6
SP-2	SIGNAGE & NOTES	6
LS-1	SITE SURVEY	6
C-1	OVERALL SITE PLAN	6
C-2	ENLARGED SITE & EQUIPMENT PLAN	6
C-3	GEOMETRIC PLAN	6
C-3.1	EROSION CONTROL PLAN, NOTES & DETAILS	6
C-3.2	GRADING PLAN	6
C-4	EQUIPMENT SPECIFICATIONS	6
C-5	SITE DETAILS	6
L-1	LANDSCAPING PLAN & DETAILS	6
A-1	PROPOSED ELEVATIONS	6
A-2	PROPOSED ELEVATIONS	6
A-3	ENLARGED ANTENNA PLAN & DETAILS	6
E-1	OVERALL UTILITY PLAN	6
E-1.1	ENLARGED UTILITY PLAN	6
E-2	ELECTRICAL & TELCO RISER DIAGRAMS	6
E-3	SINGLE-LINE DIAGRAM & CIRCUIT SCHEDULE	6
E-4	ELECTRICAL DETAILS	6
G-1	EQUIPMENT & ANTENNA GROUNDING PLAN	6
G-2	GROUNDING DETAILS	6
G-3	GROUNDING DETAILS	6
SE-1	FOUNDATION DETAILS & NOTES	
SE-2	GATE, FOUNDATION, & CMU WALL DETAILS	
SE-3	STRUCTURAL NOTES	
MP-1	TITLE SHEET	
MP-2	ELEVATION VIEWS & NOTES	
MP-3	DETAILS	
MP-4	ANTENNA MOUNT DETAILS	
MP-5	FOUNDATION	

CONSTRUCTION DRAWINGS

811
Know what's below. Call before you dig.

TO OBTAIN LOCATION OF PARTICIPANTS UNDERGROUND FACILITIES BEFORE YOU DIG IN CALIFORNIA (SOUTH), CALL DIG ALERT
TOLL FREE: 1-800-227-2600 OR
www.digalert.org
CALIFORNIA STATUTE REQUIRES MIN OF 2 WORKING DAYS NOTICE BEFORE YOU EXCAVATE

W-T Communication Design Group's Commitment to Quality
Please take a few moments to fill out our online survey.

ISSUE STATUS

REV.	DATE	DESCRIPTION	BY
1	08/03/15	90% CONSTRUCTION	CDL
2	09/04/15	90% REVISIONS	CDL
3	09/22/15	100% CONSTRUCTION	CDL
4	10/12/15	REVISED 100% CD	JNC
5	03/23/16	REVISED 100% CD	CLG
6	05/03/16	REVISED 100% CD	MMR

W-T
W-T COMMUNICATION DESIGN GROUP, LLC.
WIRELESS INFRASTRUCTURE
8560 S. Eastern Ave. Suite 220
Las Vegas, NV 89123
PH: (702) 998-1000 FAX: (702) 998-1010
www.wtengineering.com

COPYRIGHT © 2016 W-T COMMUNICATION DESIGN GROUP, LLC.

PROJECT #: T1600022

PROPRIETARY INFORMATION
THE INFORMATION CONTAINED IN THIS SET OF DRAWINGS IS PROPRIETARY & CONFIDENTIAL TO VERIZON WIRELESS

ANY USE OR DISCLOSURE OTHER THAN AS IT RELATES TO VERIZON WIRELESS IS STRICTLY PROHIBITED

verizon
15505 SAND CANYON AVENUE, D1
IRVINE, CA 92618

JEFFERY S. GUTOWSKY, PE, SE
LICENSED STRUCTURAL ENGINEER
STATE OF CALIFORNIA
LICENSE # S5743
EXPIRES: 12/31/16 SIGNED:____

GRAPEWIN
8306 GRAPEWIN STREET
EASTVALE, CA 92880

SHEET TITLE:
TITLE SHEET & PROJECT DATA

T-1

NOTE: THE ORIGINAL SIZE OF THIS PLAN IS 30" X 42" - 11"x17" PLOT WILL BE HALF SCALE UNLESS OTHERWISE NOTED

GRAPEWIN 100%CD_rev6_5.3.16.dwg

1. THE CONTRACTOR SHALL NOTIFY TOWER NETWORK CARRIER REPRESENTATIVE OF ANY ERRORS, OMISSIONS, OR INCONSISTENCIES AS THEY MAY BE DISCOVERED IN PLANS, DOCUMENTS, NOTES, OR SPECIFICATIONS PRIOR TO STARTING CONSTRUCTION INCLUDING, BUT NOT LIMITED BY, DEMOLITION. THE CONTRACTOR SHALL BE RESPONSIBLE FOR CORRECTING ANY ERROR, OMISSION, OR INCONSISTENCY AFTER THE START OF CONSTRUCTION WHICH HAS NOT BEEN BROUGHT TO THE ATTENTION OF TOWER NETWORK CARRIER REPRESENTATIVE/CONSTRUCTION PROJECT MANAGER AND SHALL INCUR ANY EXPENSES TO RECTIFY THE SITUATION. THE MEANS OF CORRECTING ANY ERROR SHALL FIRST BE APPROVED BY TOWER NETWORK CARRIER REPRESENTATIVE/CONSTRUCTION PROJECT MANAGER.

2. PRIOR TO THE SUBMISSION OF BIDS, CONTRACTORS INVOLVED SHALL VISIT THE JOB SITE TO FAMILIARIZE THEMSELVES WITH ALL CONDITIONS AFFECTING THE PROPOSED PROJECT. PRIOR TO THE COMMENCEMENT OF CONSTRUCTION, THE CONTRACTOR HAVING BEEN AWARDED THIS PROJECT SHALL VISIT THE CONSTRUCTION SITE WITH THE CONSTRUCTION/CONTRACT DOCUMENTS TO VERIFY FIELD CONDITIONS AND CONFIRM THAT THE PROJECT WILL BE ACCOMPLISHED AS SHOWN. PRIOR TO PROCEEDING WITH CONSTRUCTION, ANY ERRORS, OMISSIONS, OR DISCREPANCIES SHALL BE BROUGHT TO THE ATTENTION OF THE ARCHITECT/ENGINEER VERBALLY AND IN WRITING.

3. THE ARCHITECTS/ENGINEERS HAVE MADE EVERY EFFORT TO SET FORTH IN THE CONSTRUCTION AND CONTRACT DOCUMENTS THE COMPLETE SCOPE OF WORK. CONTRACTORS BIDDING THE JOB ARE NEVERTHELESS CAUTIONED THAT MINOR OMISSIONS OR ERRORS IN THE DRAWINGS AND OR SPECIFICATIONS SHALL NOT EXCUSE SAID CONTRACTOR FROM COMPLETING THE PROJECT AND IMPROVEMENTS IN ACCORDANCE WITH THE INTENT OF THESE DOCUMENTS. THE BIDDER SHALL BEAR THE RESPONSIBILITY OF NOTIFYING (IN WRITING) THE ARCHITECT/ENGINEER OF ANY CONFLICTS, ERRORS, OR OMISSIONS PRIOR TO SUBMISSION OF CONTRACTOR'S PROPOSAL. IN THE EVENT OF DISCREPANCIES THE CONTRACTOR SHALL PRICE THE MORE COSTLY OR EXTENSIVE WORK, UNLESS DIRECTED OTHERWISE.

4. DRAWINGS ARE NOT TO BE SCALED UNDER ANY CIRCUMSTANCE. TOWER NETWORK CARRIER REPRESENTATIVE IS NOT RESPONSIBLE FOR ANY ERRORS RESULTING FROM THIS PRACTICE. WRITTEN DIMENSIONS TAKE PRECEDENCE OVER SCALE SHOWN ON PLANS.

5. OWNER, CONTRACTOR, AND TOWER NETWORK CARRIER REPRESENTATIVE/ CONSTRUCTION/PROJECT MANAGER SHALL MEET JOINTLY TO VERIFY ALL DRAWINGS AND SPECIFICATIONS PRIOR TO THE START OF CONSTRUCTION.

6. THE GENERAL CONTRACTOR SHALL RECEIVE WRITTEN AUTHORIZATION TO PROCEED WITH CONSTRUCTION PRIOR TO STARTING WORK ON ANY ITEM NOT CLEARLY DEFINED BY THE CONSTRUCTION DRAWINGS/CONTRACT DOCUMENTS.

7. THE CONTRACTOR SHALL PERFORM WORK DURING OWNER'S PREFERRED HOURS TO AVOID DISTURBING NORMAL BUSINESS.

8. THE CONTRACTOR SHALL PROVIDE TOWER NETWORK CARRIER REPRESENTATIVE PROPER INSURANCE CERTIFICATES NAMING TOWER NETWORK CARRIER REPRESENTATIVE AS ADDITIONAL INSURED, AND TOWER NETWORK CARRIER REPRESENTATIVE PROOF OF LICENSE(S) AND PE & PD INSURANCE.

9. THE CONTRACTOR SHALL SUPERVISE AND DIRECT THE PROJECT DESCRIBED IN THE CONTRACT DOCUMENTS. THE CONTRACTOR SHALL BE SOLELY RESPONSIBLE FOR ALL CONSTRUCTION MEANS, METHODS, TECHNIQUES, SEQUENCES, AND PROCEDURES FOR COORDINATING ALL PORTIONS OF THE WORK UNDER THE CONTRACT.

10. THE CONTRACTOR SHALL INSTALL ALL EQUIPMENT AND MATERIALS ACCORDING TO MANUFACTURER'S/VENDOR'S SPECIFICATIONS UNLESS NOTED OTHERWISE OR WHERE LOCAL CODES OR ORDINANCES TAKE PRECEDENCE.

11. ALL WORK PERFORMED ON THE PROJECT AND MATERIALS INSTALLED SHALL BE IN STRICT ACCORDANCE WITH ALL APPLICABLE CODES, REGULATIONS, AND ORDINANCES. CONTRACTOR SHALL GIVE ALL NOTICES AND COMPLY WITH ALL LAWS, ORDINANCES, RULES, REGULATIONS AND LAWFUL ORDERS OF ANY PUBLIC AUTHORITY, MUNICIPAL AND UTILITY COMPANY SPECIFICATIONS, AND LOCAL AND STATE JURISDICTIONAL CODES BEARING ON THE PERFORMANCE OF THE WORK.

12. A COPY OF GOVERNING AGENCY APPROVED PLANS SHALL BE KEPT IN A PLACE SPECIFIED BY THE GOVERNING AGENCY, AND BY LAW, SHALL BE AVAILABLE FOR INSPECTION AT ALL TIMES. THE ORIGINAL PERMIT SET PLANS ARE NOT TO BE USED BY THE WORKMEN. ALL CONSTRUCTION SETS SHALL REFLECT THE SAME INFORMATION AS GOVERNING AGENCY APPROVED PLANS. THE CONTRACTOR SHALL ALSO MAINTAIN ONE SET OF PLANS, IN GOOD CONDITION, COMPLETE WITH ALL REVISIONS, ADDENDA, AND CHANGE ORDERS ON THE PREMISES AT ALL TIMES UNDER THE DIRECT CARE OF THE SUPERINTENDENT. THE CONTRACTOR SHALL SUPPLY TOWER NETWORK CARRIER REPRESENTATIVE/CONSTRUCTION PROJECT MANAGER WITH A COPY OF ALL REVISIONS, ADDENDA, AND/OR CHANGE ORDERS AT THE CONCLUSION OF THE WORK AS A PART OF THE AS-BUILT DRAWING RECORDS.

13. THE STRUCTURAL COMPONENTS OF ADJACENT CONSTRUCTION OR FACILITIES ARE NOT TO BE ALTERED BY THIS CONSTRUCTION PROJECT UNLESS NOTED OTHERWISE.

14. THE CONTRACTOR SHALL STUDY THE STRUCTURAL, ELECTRICAL, MECHANICAL, AND PLUMBING PLANS AND CROSS CHECK THEIR DETAILS, NOTES, DIMENSIONS, AND ALL REQUIREMENTS PRIOR TO THE START OF ANY WORK.

15. THE CONTRACTOR SHALL BE RESPONSIBLE FOR THE COMPLETE SECURITY OF THE PROJECT AND SITE WHILE THE WORK IS IN PROGRESS UNTIL THE JOB IS COMPLETE.

16. THE CONTRACTOR HAS THE RESPONSIBILITY OF LOCATING ALL EXISTING UTILITIES WHETHER OR NOT SHOWN ON THE PLANS, AND TO PROTECT THEM FROM DAMAGE. THE CONTRACTOR, OR SUBCONTRACTOR AS SPECIFIED IN THE AGREEMENT BETWEEN SUBCONTRACTOR AND CONTRACTOR, SHALL BEAR THE EXPENSES OF REPAIR AND/OR REPLACEMENT OF UTILITIES OR OTHER PROPERTY DAMAGE BY OPERATIONS IN CONJUNCTION WITH THE EXECUTION OF THE WORK.

17. THE REFERENCES ON THE DRAWINGS ARE FOR CONVENIENCE ONLY AND SHALL NOT LIMIT THE APPLICATION OF ANY DRAWING OR DETAIL.

18. ALL DIMENSIONS ON THE PLANS ARE TO FACE OF STUD (F.O.S.) UNLESS NOTED OTHERWISE (U.N.O.).

19. ALL EXISTING CONSTRUCTION, EQUIPMENT, AND FINISHES NOTED TO BE REMOVED SHALL BECOME THE PROPERTY OF THE CONTRACTOR AND WILL BE REMOVED FROM THE SITE WITH THE FOLLOWING EXCEPTIONS:
   A. PROPERTY NOTED TO BE RETURNED TO THE OWNER.
   B. PROPERTY NOTED TO BE REMOVED BY THE OWNER.

20. THE GOVERNING AGENCIES, CODE AUTHORITIES, AND BUILDING INSPECTORS SHALL PROVIDE THE MINIMUM STANDARDS FOR CONSTRUCTION TECHNIQUES, MATERIALS, AND FINISHES USED THROUGHOUT THE PROJECT. TRADE STANDARDS AND/OR PUBLISHED MANUFACTURER'S SPECIFICATIONS MEETING OR EXCEEDING DESIGN REQUIREMENTS SHALL BE USED FOR INSTALLATION.

21. WHEN REQUIRED STORAGE OF MATERIALS OCCURS, THEY SHALL BE EVENLY DISTRIBUTED OVER ROUGH FRAMED FLOORS OR ROOFS SO AS NOT TO EXCEED THE DESIGNED LIVE LOADS FOR THE STRUCTURE. TEMPORARY SHORING AND/OR BRACING IS TO BE PROVIDED WHERE THE STRUCTURE HAS NOT ATTAINED THE DESIGN STRENGTH FOR THE CONDITIONS PRESENT.

22. SEAL ALL PENETRATIONS THROUGH FIRE-RATED AREAS WITH U.L. LISTED OR FIRE MARSHALL APPROVED MATERIALS IF APPLICABLE TO THIS FACILITY AND OR PROJECT SITE.

23. BUILDING INSPECTORS AND/OR OTHER BUILDING OFFICIALS ARE TO BE NOTIFIED PRIOR TO ANY GRADING, CONSTRUCTION, AND ANY OTHER PROJECT EFFORT AS MANDATED BY THE GOVERNING AGENCY.

24. CONTRACTOR TO PROVIDE A PORTABLE FIRE EXTINGUISHER WITH A RATING OF NOT LESS THAN 2-A OR 2-A10BC WITHIN 75 FEET TRAVEL DISTANCE TO ALL PORTIONS OF PROJECT AREA DURING CONSTRUCTION.

25. THE PROJECT, WHEN COMPLETED, SHALL COMPLY WITH LOCAL SECURITY CODES AND TITLE-24 ENERGY CONSERVATION REQUIREMENTS. (TITLE-24 WHEN APPLICABLE)

26. ALL GLASS AND GLAZING IS TO COMPLY WITH CHAPTER 54 OF THE U.S. CONSUMER SAFETY COMMISSION - SAFETY STANDARDS FOR ARCHITECTURAL GLAZING MATERIALS (42 FR 1428, CFR PART 1201) AND LOCAL SECURITY REQUIREMENTS.

27. CONTRACTOR SHALL MAKE NECESSARY PROVISIONS TO PROTECT EXISTING IMPROVEMENTS, EASEMENTS, PAVING, CURBING, ETC. DURING CONSTRUCTION. UPON COMPLETION OF WORK, CONTRACTOR SHALL REPAIR ANY DAMAGE THAT MAY HAVE OCCURRED DUE TO CONSTRUCTION ON OR ABOUT THE PROPERTY.

28. CONTRACTOR SHALL KEEP GENERAL WORK AREA CLEAN AND HAZARD FREE DURING CONSTRUCTION AND DISPOSE OF ALL DIRT, DEBRIS, AND RUBBISH. CONTRACTOR SHALL REMOVE EQUIPMENT NOT SPECIFIED AS REMAINING ON THE PROPERTY OR PREMISES. SITE SHALL BE LEFT IN CLEAN CONDITION AND FREE FROM PAINT SPOTS, DUST, OR SMUDGES OF ANY NATURE.

29. NEW CONSTRUCTION ADDED TO EXISTING CONSTRUCTION SHALL MATCH IN FORM, TEXTURE, FINISH, AND IN MATERIALS EXCEPT AS NOTED IN THE PLANS AND SPECIFICATIONS.

30. THE CONTRACTOR SHALL PROVIDE ALL NECESSARY BACKING, BLOCKING, AND/OR SLEEVES REQUIRED FOR THE INSTALLATION OF FIXTURES, MECHANICAL EQUIPMENT, PLUMBING, HARDWARE, AND FINISH ITEMS TO INSURE A PROPER AND COMPLETE JOB.

31. THE CONTRACTOR IS RESPONSIBLE FOR PROVIDING A PROJECT LEVEL, STRAIGHT, AND TRUE ACCORDING TO THE PLANS. THE CONTRACTOR SHALL COMPARE THE LINES AND LEVELS OF THE EXISTING CONDITIONS WITH THOSE SHOWN ON THE PLANS PRIOR TO THE START OF ANY CONSTRUCTION. TOWER NETWORK CARRIER REPRESENTATIVE SHALL BE NOTIFIED OF ANY ERRORS, OMISSIONS, OR INCONSISTENCIES PRIOR TO ANY CONSTRUCTION.

32. THE CONTRACTOR IS TO PROVIDE PROTECTION FOR ADJOINING PROPERTIES FROM PHYSICAL HARM, NOISE, DUST, DIRT, AND FIRE AS REQUIRED BY THE GOVERNING AGENCIES.

33. WHERE SPECIFIED, MATERIALS TESTING SHALL BE TO THE LATEST STANDARDS AND/OR REVISIONS AVAILABLE AS REQUIRED BY THE GOVERNING AGENCY RESPONSIBLE FOR RECORDING THE RESULTS.

34. THE CONTRACTOR IS RESPONSIBLE FOR THE STORAGE OF ALL MATERIALS AND SHALL NOT DO SO ON PUBLIC PROPERTY WITHOUT A PERMIT TO DO SO FROM THE GOVERNING AGENCIES FOR THIS PURPOSE.

35. GENERAL NOTES AND STANDARD DETAILS ARE THE MINIMUM REQUIREMENTS TO BE USED IN CONDITIONS WHICH ARE NOT SPECIFICALLY SHOWN OTHERWISE.

36. TRADES INVOLVED IN THE PROJECT SHALL BE RESPONSIBLE FOR THEIR OWN CUTTING, FITTING, PATCHING, ETC., SO AS TO BE RECEIVED PROPERLY BY THE WORK OF OTHER TRADES.

37. ALL DEBRIS AND REFUSE IS TO BE REMOVED FROM THE PROJECT PREMISES AND SHALL BE LEFT IN A CLEAN (BROOM FINISH) CONDITION AT ALL TIMES BY EACH TRADE AS THEY PERFORM THEIR OWN PORTION OF THE WORK.

38. TOWER NETWORK CARRIER REPRESENTATIVE DOES NOT GUARANTEE ANY PRODUCTS, FIXTURES, AND/OR ANY EQUIPMENT NAMED BY A TRADE OR MANUFACTURER. GUARANTEE OR WARRANTY THAT MAY BE IN EFFECT IS DONE SO THROUGH THE COMPANY OR MANUFACTURER PROVIDING THE PRODUCT, FIXTURE, AND/OR EQUIPMENT ONLY, UNLESS SPECIFIC RESPONSIBILITY IS ALSO PROVIDED BY THE CONTRACTOR/SUBCONTRACTOR IN WRITTEN FORM.

39. CAUTION! CALL BEFORE YOU DIG! BURIED UTILITIES EXIST IN THE AREA AND UTILITY INFORMATION SHOWN MAY NOT BE COMPLETE. CONTACT THE ONE-CALL UTILITY LOCATE SERVICE A MINIMUM OF 48 HOURS PRIOR TO CONSTRUCTION. 1-800-227-2600.

40. WHEN APPLICABLE, CONTRACTOR IS RESPONSIBLE TO CALL, COORDINATE AND MAKE ARRANGEMENTS FOR ROW AND/OR PRIVATE PROPERTY LOCATE BASED ON SPECIFIC SITE REQUIREMENTS.

41. SEE CIVIL DRAWINGS FOR ADDITIONAL SITE INFORMATION.

42. CONTRACTORS TO DOCUMENT ALL WORK PERFORMED WITH PHOTOGRAPHS AND SUBMIT TO TOWER NETWORK CARRIER REPRESENTATIVE ALONG WITH REDLINED CONSTRUCTION SET.

43. CONTRACTOR SHALL DOCUMENT ALL CHANGES MADE IN THE FIELD BY MARKING UP (REDLINING) THE APPROVED CONSTRUCTION SET AND SUBMITTING THE REDLINES ALONG WITH PHOTOGRAPHS PER NETWORK CARRIER REQUIREMENTS.

44. GENERAL CONTRACTOR IS TO COORDINATE ALL POWER INSTALLATION WITH POWER COMPANY AS REQUIRED. CONTRACTOR TO REPORT POWER INSTALLATION COORDINATION SOLUTION(S) TO NETWORK CARRIER REPRESENTATIVE, PROJECT CONSTRUCTION MANAGER AND ARCHITECT.

45. ANY SUBSTITUTIONS OF MATERIALS AND/OR EQUIPMENT, MUST BE APPROVED BY TOWER NETWORK CARRIER REPRESENTATIVE/CONSTRUCTION MANAGER.

46. THE GENERAL CONTRACTOR SHALL BE RESPONSIBLE FOR AND SHALL REMEDY ALL FAULTY, INFERIOR AND/OR IMPROPER MATERIALS, DAMAGED GOODS, AND/OR FAULTY WORKMANSHIP FOR ONE (1) YEAR AFTER THE PROJECT IS COMPLETE AND ACCEPTED UNDER THIS CONTRACT; UNLESS NOTED OTHERWISE IN THE CONTRACT BETWEEN THE OWNER AND THE CONTRACTOR. (EXCEPTION: THE ROOFING SUBCONTRACTOR SHALL FURNISH A MAINTENANCE AGREEMENT FOR ALL WORK DONE, COSIGNED BY THE GENERAL CONTRACTOR, TO MAINTAIN THE ROOFING IN A WATERTIGHT CONDITION FOR A PERIOD OF TWO (2) YEARS STARTING AFTER THE DATE OF SUBSTANTIAL COMPLETION OF THE PROJECT, UNLESS OTHERWISE WRITTEN IN THE CONTRACT BETWEEN THE OWNER AND THE CONTRACTOR.)

47. THE CONTRACTOR SHALL PROVIDE ADEQUATE PROTECTION FOR THE SAFETY OF THE OWNER'S EMPLOYEES AND WORKMEN AT ALL TIMES DURING THE CONSTRUCTION OF THE PROJECT.

48. THE CONTRACTOR SHALL BE REQUIRED TO PAY FOR ALL NECESSARY PERMITS AND/OR FEES WITH RESPECT TO THE WORK TO COMPLETE THE PROJECT. BUILDING PERMIT APPLICATIONS SHALL BE FILED BY THE OWNER OR HIS REPRESENTATIVE. CONTRACTOR SHALL OBTAIN PERMIT AND MAKE FINAL PAYMENT FOR SAID DOCUMENT.

49. TOWER NETWORK CARRIER REPRESENTATIVE WILL REVIEW AND APPROVE SHOP DRAWINGS AND SAMPLES FOR CONFORMANCE WITH DESIGN CONCEPT. TOWER NETWORK CARRIER REPRESENTATIVE PROJECT APPROVAL OF A SEPARATE ITEM SHALL NOT INCLUDE APPROVAL OF AN ASSEMBLY IN WHICH THE ITEM FUNCTIONS.

50. ALL ANTENNAS MOUNTED ON ROOF SUPPORT FRAMES TO BE PROVIDED BY TOWER NETWORK CARRIER REPRESENTATIVE.

51. CONTRACTOR TO PATCH AND REPAIR ALL GROUND SURFACES WITHIN THE CONSTRUCTION AREA AS NECESSARY TO PROVIDE A UNIFORM SURFACE AND MAINTAIN EXISTING SURFACE DRAINAGE SLOPES.

52. CONTRACTOR TO REPLACE LANDSCAPE VEGETATION THAT WAS DAMAGED DUE TO CONSTRUCTION, AND TO MODIFY REMAINING IRRIGATION LINES TO OPERATING CONDITION, PROVIDING FULL COVERAGE TO IMPACTED AREAS.

53. IN THE CASE OF ROOFTOP SOLUTIONS FOR EQUIPMENT AND/OR ANTENNA FRAMES WHERE PENETRATION OF EXISTING ROOFING MATERIALS OCCUR, THE GENERAL CONTRACTOR SHALL COORDINATE WITH BUILDING OWNER AND BUILDING ROOFING CONTRACTOR OF RECORD FOR INSTALLATION, PATCH, REPAIR OR ANY AUGMENTATION TO THE ROOF, AND HAVE THE WORK GUARANTEED UNDER THE ROOFING CONTRACTOR'S WARRANTY FOR MOISTURE PENETRATION AND OTHER FUTURE BREACH OF ROOFING INTEGRITY.

54. IN THE CASE OF ROOFTOP SOLUTIONS WITH THE INSTALLATION OF ANTENNAS WITHIN CONCEALED (SHROUDED) SUPPORT FRAMES OR TRIPODS, THE GENERAL CONTRACTOR SHALL COORDINATE WITH THE FRP DESIGNER/FABRICATOR TO ENSURE THAT THE FINAL FRP SHROUD IS SIMULATING (IN APPEARANCE) DESIGNATED EXISTING EXTERIOR BUILDING FACADE MATERIALS, TEXTURES, AND COLORS. THE CONTRACTOR SHALL FURTHERMORE ENSURE THE USE OF COUNTERSUNK FASTENERS IN ALL FRP CONSTRUCTION. WHEN PHOTOSIMULATIONS ARE PROVIDED, THE CONTRACTOR SHALL ENSURE THAT FINAL CONSTRUCTION REPRESENTS WHAT IS INDICATED IN PHOTOSIMULATION. SHOP DRAWINGS SHALL BE PROVIDED TO THE GENERAL CONTRACTOR, CONSTRUCTION COORDINATOR, AND ARCHITECT PRIOR TO FABRICATION AND CONSTRUCTION.

55. IN THE CASE OF ROOFTOP SOLUTIONS FOR EQUIPMENT AND/OR ANTENNA FRAMES WHERE ANCHORING TO A CONCRETE ROOF SLAB IS REQUIRED, CONTRACTORS SHALL CONFIRM (PRIOR TO SUBMITTING BID) WITH CONSULTING CONSTRUCTION COORDINATOR AND ARCHITECT/ENGINEER THE PRESENCE OF POST TENSION TENDONS WITHIN THE ROOF SLAB (RESULTING FROM AN UNDOCUMENTED DESIGN CHANGE IN THE EXISTING BUILDING "AS-BUILT DRAWING SET") HAVING INDICATED AN ORIGINAL DESIGN OF REINFORCED CONCRETE W/ EMBEDDED STEEL REBAR. IN THE EVENT POST TENSION SLAB IS PRESENT, CONTRACTOR SHALL INCLUDE PROVISIONS FOR X-RAY/SCAN PROCEDURES (INCLUDED IN BID) FOR ALL PENETRATION AREAS WHERE ANCHORING OCCURS.

56. GENERAL & SUB CONTRACTORS SHALL USE STAINLESS STEEL METAL LOCKING TIES FOR ALL CABLE TRAY TIE DOWNS AND ALL OTHER GENERAL TIE DOWNS (WHERE APPLICABLE). PLASTIC ZIP TIES SHALL NOT BE PERMITTED FOR USE ON TOWER NETWORK CARRIER REPRESENTATIVE PROJECTS. RECOMMENDED MANUFACTURER SHALL BE: PANDUIT CORP. METAL LOCKING TIES MODEL NO. MLT4S-CP UNDER SERIES-304 (OR EQUAL). PANDUIT PRODUCT DISTRIBUTED BY TRIARC.

57. CONTRACTOR & CREWS SHALL ABIDE BY VERIZON CONSTRUCTION STANDARDS/REQUIREMENTS AS DESCRIBED IN THE VERIZON SAFETY HANDBOOK.

58. OSHA REGULATIONS/STANDARDS SHALL BE REVIEWED & FOLLOWED BY ALL EQUIPMENT INSTALLERS & TOWER/ROOF TOP CONTRACTORS/SUBCONTRACTORS DURING CONSTRUCTION.

NOTE:
W-T'S SCOPE OF WORK DOES NOT INCLUDE A STRUCTURAL EVALUATION OF THIS TOWER OR STRUCTURE. AN ANALYSIS OF THE TOWER OR STRUCTURE HAS BEEN PERFORMED BY VECTOR ENGINEERS DATED SEPTEMBER 8, 2015 THE ANTENNAS AND EQUIPMENT SHOWN ON THIS PLAN ARE FOR REFERENCE ONLY AND THE HEIGHT, LOCATION AND MOUNTING SHOWN IN THE STRUCTURAL ANALYSIS SHALL SUPERSEDE THESE DRAWINGS.

NOTE: THE ORIGINAL SIZE OF THIS PLAN IS 24" X 36", 11"x17" PLOT WILL BE HALF SCALE UNLESS OTHERWISE NOTED

GRAPEWIN 100%CD_rev6_5.3.16.dwg

ISSUE STATUS

REV.	DATE	DESCRIPTION	BY
1	08/03/15	90% CONSTRUCTION	CDL
2	09/04/15	90% REVISIONS	CDL
3	09/22/15	100% CONSTRUCTION	CDL
4	10/12/15	REVISED 100% CD	JNC
5	03/23/16	REVISED 100% CD	CLG
6	05/03/16	REVISED 100% CD	MMR

W-T COMMUNICATION DESIGN GROUP, LLC.
WIRELESS INFRASTRUCTURE
8560 S. Eastern Ave. Suite 220
Las Vegas, NV 89123
PH: (702) 998-1000 FAX: (702) 998-1010
www.wtengineering.com
COPYRIGHT © 2016 W-T COMMUNICATION DESIGN GROUP, LLC.
PROJECT #: T1600022

PROPRIETARY INFORMATION

THE INFORMATION CONTAINED IN THIS SET OF DRAWINGS IS PROPRIETARY & CONFIDENTIAL TO VERIZON WIRELESS

ANY USE OR DISCLOSURE OTHER THAN AS IT RELATES TO VERIZON WIRELESS IS STRICTLY PROHIBITED

verizon

15505 SAND CANYON AVENUE, D1
IRVINE, CA 92618

JEFFERY S. GUTOWSKY, PE, SE
LICENSED STRUCTURAL ENGINEER
STATE OF CALIFORNIA
LICENSE # S5743
EXPIRES: 12/31/16 SIGNED:____

GRAPEWIN
8306 GRAPEWIN STREET
EASTVALE, CA 92880

SHEET TITLE:

GENERAL NOTES

SP-1

BATTERY INFORMATION /NOTES:

BATTERY MFR.:	SAFT INDUSTRIAL BATTERY GROUP
MODEL No.:	SAFT TELX 180 AHR SAFT KIT #80-94778-02
ELECTROLYTE CONTENT PER CELL:	0.213
ELECTROLYTE HAZARD CLASSIFICATION PER '07 C.F.C.:	CORROSIVE
No. OF CELLS TO BE INSTALLED:	38 CELL MAX.
TOTAL ELECTROLYTE CONTAINED ON SITE (3 STINGS x 8.09= 24.27):	24.27

A. QUANTITIES OF 500 GAL. OR LESS ARE EXEMPT PER TABLE 5003.1.1 OF THE 2013 C.F.C.

B. SINGLE VESSEL CAPACITIES OF 20 GAL. OR LESS, AND AGGREGATE QUANTITIES NOT IN EXCESS OF 100 GAL. ARE EXEMPT PER ARTICLE 54 OF THE 2013 C.F.C.

C. QUANTITIES LESS THAN 50 GAL. ARE EXEMPT FROM C.F.C. ARTICLE 50, AND SHALL NOT REQUIRE PERMIT. C.F.C 608

D. ANY CHANGES OR ADDITIONS TO BACK-UP BATTERIES MUST COMPLY WITH 2013 C.F.C. ARTICLE 54, AND SHALL NOT CONTAIN ELECTROLYTE QUANTITIES IN EXCESS OF 50

E. VENTILATION SHALL BE PROVIDED IN ACCORDANCE WITH THE CALIFORNIA MECHANICAL CODE UNDER C.F.C. 608.6.1 & 608.6.2

FIRE DEPARTMENT NOTES:

A. FIRE DEPARTMENT FINAL INSPECTION REQUIRED. SCHEDULE INSPECTION 2 DAYS IN ADVANCE.

B. A CFC PERMIT TO OPERATE BATTERY SYSTEMS WITH STATIONARY LEAD-ACID BATTERIES IS NOT REQUIRED FOR THE QUANTITIES ON SITE.

C. A CFC PERMIT MAY BE REQUIRED FOR THE BATTERY SELF CONTAIN HAZARDOUS MATERIALS ON SITE.

D. A HAZARDOUS MATERIALS IDENTIFICATION SIGN IS REQUIRED FOR ALL ENTRANCES INTO BATTERY STORAGE AREAS. LETTERS MUST BE AT LEAST 1" IN HEIGHT AND IN A COLOR WHICH CONTRASTS TO THE BACKGROUND OF THE SIGN AND LIST THE FOLLOWING:

CLASS 1 WATER REACTIVE LIQUID
TOXIC LIQUID
CORROSIVE LIQUID
OTHER HEALTH HAZARD LIQUID

E. AN APPROVED METHOD TO NEUTRALIZE SPILLED ELECTROLYTE SHALL BE PROVIDED IN THE BATTERY ROOM.

F. BATTERIES SHALL BE PROVIDED WITH SAFETY VENTING CAPS.

G. LOCATIONS AND CLASSIFICATIONS OF EXTINGUISHERS SHALL BE IN ACCORDANCE WITH THE UNIFORM FIRE CODE STANDARD 10-1 AND PLACEMENT IS SUBJECT TO APPROVAL OF THE FIRE INSPECTOR.

H. STORAGE, DISPENSING OR USE OF ANY FLAMMABLE AND COMBUSTIBLE LIQUIDS, FLAMMABLE AND COMPRESSED GASES, AND OTHER HAZARDOUS MATERIALS SHALL COMPLY WITH UNIFORM FIRE CODE REGULATIONS.

I. EXIT DOORS SHALL BE ABLE TO OPEN FROM THE INSIDE WITHOUT THE USE OF KEY OR ANY SPECIAL KNOWLEDGE OR EFFORT.

J. ADDRESS NUMBERS SHALL BE A MINIMUM 6 INCHES HIGH AND PLAINLY VISIBLE FROM ROADWAY BUILDING IS ADDRESSED ON.

K. REQUIRED SIGNAGE SHALL INCLUDE LETTERING HEIGHT OF AT LEAST ONE INCH, IN A COLOR THAT CONTRASTS TO THE SIGN BACKGROUND, AND SHALL BE PROMINENTLY DISPLAYED.

L. REQUIRED SIGNAGE SHALL INCLUDE, BUT MAY NOT BE LIMITED TO, APPLICABLE TYPES FROM EXAMPLES SHOWN HEREIN (SEE SIGNAGE).

SAFETY PROCEDURES:

1. OSHA REGULATIONS/STANDARDS SHALL BE REVIEWED/FOLLOWED BY ALL EQUIPMENT INSTALLERS & TOWER/ROOF TOP CONTRACTORS/SUBCONTRACTORS DURING CONSTRUCTION.

2. CONTRACTOR & CREWS SHALL ABIDE BY VERIZON CONSTRUCTION STANDARDS/REQUIREMENTS AS DESCRIBED IN THE VERIZON SAFETY HANDBOOK.

WARNING

THIS FACILITY CONTAINS
CORROSIVE LIQUID
TOXIC LIQUID
CLASS 1 WATER REACTIVE LIQUID

DANGER

HAZARDOUS
MATERIAL
STORAGE
AREA

Radio frequency fields beyond this point may exceed the FCC general public exposure limit.

Obey all posted signs and site guidelines for working in radio frequency environments.

In accordance with Federal Communications Commission rules on radio frequency emissions 47 CFR 1.1307(b)

REQUIRED NFPA SIGNAGE

IN CASE OF EMERGENCY CALL

1-949-286-7000

SITE NUMBER:
SITE NAME: GRAPEWIN

NATIONAL OPERATIONS CENTER (NOC)
1-800-829-0420

EMERGENCY CONTACT SIGNAGE

ISSUE STATUS

REV.	DATE	DESCRIPTION	BY
1	08/03/15	90% CONSTRUCTION	CDL
2	09/04/15	90% REVISIONS	CDL
3	09/22/15	100% CONSTRUCTION	CDL
4	10/12/15	REVISED 100% CD	JNC
5	03/23/16	REVISED 100% CD	CLG
6	05/03/16	REVISED 100% CD	MMR

W-T
W-T COMMUNICATION DESIGN GROUP, LLC.
WIRELESS INFRASTRUCTURE
8560 S. Eastern Ave. Suite 220
Las Vegas, NV 89123
PH: (702) 998-1000 FAX: (702) 998-1010
www.wtengineering.com

COPYRIGHT © 2016 W-T COMMUNICATION DESIGN GROUP, LLC.

PROJECT #: T1600022

PROPRIETARY INFORMATION

THE INFORMATION CONTAINED IN THIS SET OF DRAWINGS IS PROPRIETARY & CONFIDENTIAL TO VERIZON WIRELESS

ANY USE OR DISCLOSURE OTHER THAN AS IT RELATES TO VERIZON WIRELESS IS STRICTLY PROHIBITED

verizon

15505 SAND CANYON AVENUE, D1
IRVINE, CA 92618

JEFFERY S. GUTOWSKY, PE, SE
LICENSED STRUCTURAL ENGINEER
STATE OF CALIFORNIA
LICENSE # S5743
EXPIRES: 12/31/16 SIGNED:____

GRAPEWIN
8306 GRAPEWIN STREET
EASTVALE, CA 92880

SHEET TITLE:

SIGNAGE & NOTES

SP-2

NOTE: THE ORIGINAL SIZE OF THIS PLAN IS 30" X 42". 11"x17" PLOT WILL BE HALF SCALE UNLESS OTHERWISE NOTED

GRAPEWIN 100%CD_rev6_5.3.16.dwg

ABBREVIATIONS

A/C	AIR CONDITIONING	LBS	POUNDS
AGL	ABOVE GRADE LEVEL		
APPROX	APPROXIMATELY	MAX	MAXIMUM
		MECH	MECHANICAL
BLDG	BUILDING	MTL	METAL
BLK	BLOCKING	MFR	MANUFACTURER
		MGR	MANAGER
CLG	CEILING	MIN	MINIMUM
CLR	CLEAR	MISC	MISCELLANEOUS
CONC	CONCRETE		
CONST	CONSTRUCTION	NA	NOT APPLICABLE
CONT	CONTINUOUS	NIC	NOT IN CONTRACT
		NTS	NOT TO SCALE
DBL	DOUBLE		
DIA	DIAMETER	OC	ON CENTER
DIAG	DIAGONAL	OD	OUTSIDE DIAMETER
DN	DOWN	PLYWD	PLYWOOD
DET	DETAIL	PROJ	PROJECT
DWG	DRAWING	PROP	PROPERTY
		PT	PRESSURE TREATED
EA	EACH		
ELEV	ELEVATION	REQ	REQUIRED
ELEC	ELECTRICAL	RM	ROOM
EQ	EQUAL	RO	ROUGH OPENING
EQUIP	EQUIPMENT	RRH	RADIO REMOTE HEAD
EXT	EXTERIOR		
		SHT	SHEET
FIN	FINISH	SIM	SIMILAR
FLUOR	FLUORESCENT	SPEC	SPECIFICATION
FLR	FLOOR	SF	SQUARE FOOT
FT	FOOT	SS	STAINLESS STEEL
		STL	STEEL
GA	GAUGE	STRUCT	STRUCTURAL
GALV	GALVANIZED	STD	STANDARD
GC	GENERAL CONTRACTOR	SUSP	SUSPENDED
GRND	GROUND		
GYP BD	GYPSUM WALL BOARD	THRU	THROUGH
		TMA	TOWER MOUNT AMPLIFIER
HORZ	HORIZONTAL		
HR	HOUR	TNND	TINNED
HT	HEIGHT	TYP	TYPICAL
HVAC	HEATING VENTILATION AIR CONDITIONING	UNO	UNLESS NOTED OTHERWISE
ID	INSIDE DIAMETER	VERT	VERTICAL
IN	INCH	VIF	VERIFY IN FIELD
INFO	INFORMATION		
INSUL	INSULATION	W/	WITH
INT	INTERIOR	W/O	WITHOUT
IBC	INTERNATIONAL BUILDING CODE	WP	WATER PROOF

LEGEND

- SUBJECT BOUNDARY LINE
- RIGHT-OF-WAY CENTERLINE
- RIGHT-OF-WAY LINE
- ADJACENT BOUNDARY LINE
- U/E — UNDERGROUND ELECTRICAL LINE
- U/T — UNDERGROUND TELCO LINE
- G — BURIED GAS LINE
- OHT — OVERHEAD TELEPHONE LINE
- W — BURIED WATER LINE
- SS — BURIED SANITARY SEWER
- SD — BURIED STORM DRAIN
- X — CHAIN LINK FENCE
- WROUGHT IRON FENCE

TRANSFORMER	FIRE HYDRANT
LIGHT STANDARD	GATE VALVE
POWER VAULT	WATER METER
UTILITY BOX	CATCH BASIN, TYPE I
UTILITY POLE	CATCH BASIN, TYPE II

NOTE:
ALL WORK WITHIN PUBLIC ROW WILL BE UNDER SEPARATE PERMIT.

NOTE:
CONTRACTOR TO INSTALL A 17"x30" PULL BOX FOR POWER & TELCO AFTER EVERY 300' OR AFTER EVERY TWO 90° BENDS.

NOTE:
REFERENCE SURVEY BY DIAMONDBACK LAND SURVEYING ON MAY 8, 2015 FOR ALL PROPERTY LINES AND EXISTING EASEMENT INFORMATION.

NOTE:
W-T'S SCOPE OF WORK DOES NOT INCLUDE A STRUCTURAL EVALUATION OF THIS TOWER OR STRUCTURE. AN ANALYSIS OF THE TOWER OR STRUCTURE HAS BEEN PERFORMED BY VECTOR ENGINEERS DATED SEPTEMBER 8, 2015 THE ANTENNAS AND EQUIPMENT SHOWN ON THIS PLAN ARE FOR REFERENCE ONLY AND THE HEIGHT, LOCATION AND MOUNTING SHOWN IN THE STRUCTURAL ANALYSIS SHALL SUPERSEDE THESE DRAWINGS.

NOTE: THE ORIGINAL SIZE OF THIS PLAN IS 36" X 24". 11"x17" PLOT WILL BE HALF SCALE UNLESS OTHERWISE NOTED.

PROPOSED AZIMUTHS

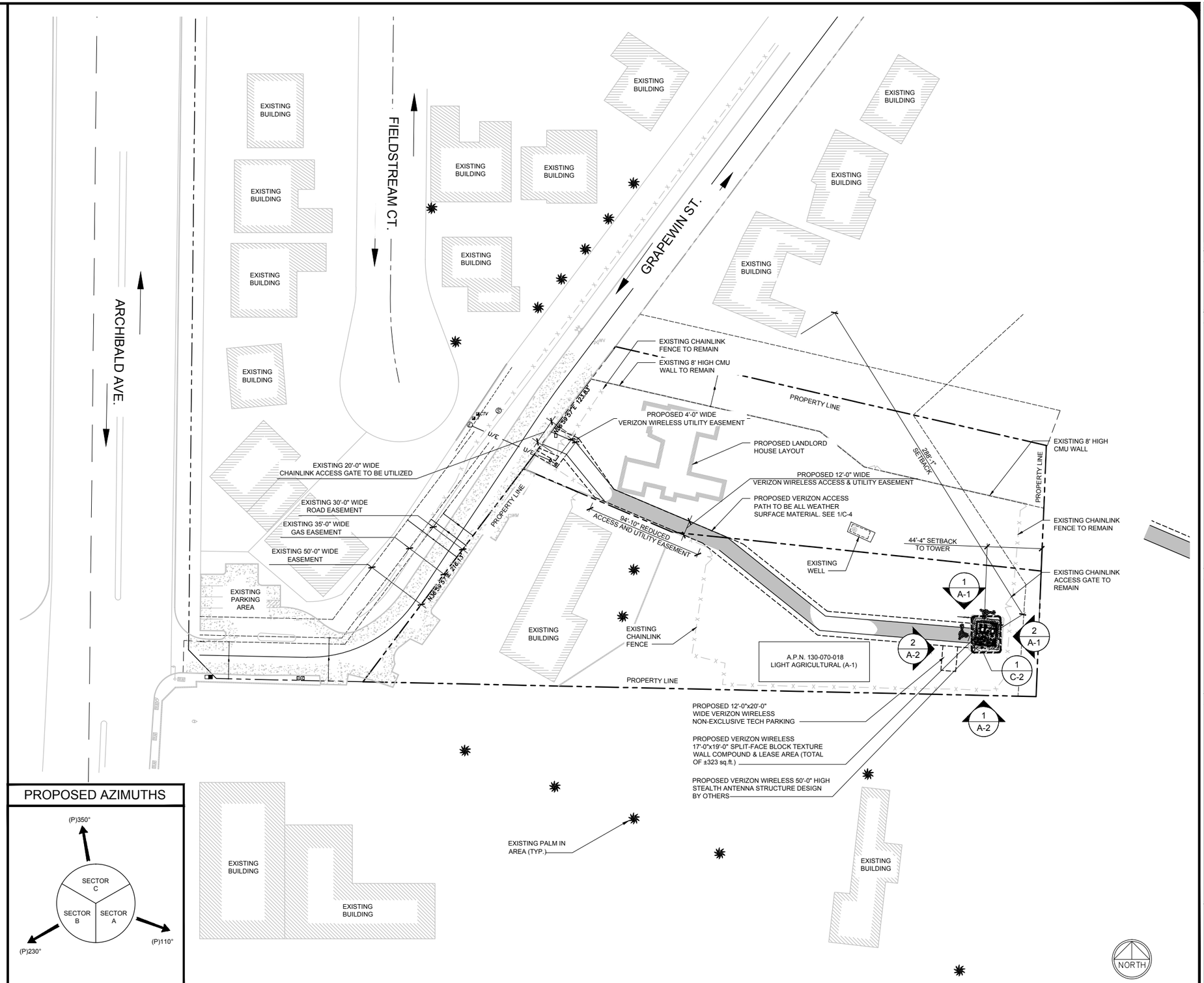

ISSUE STATUS

REV.	DATE	DESCRIPTION	BY
1	08/03/15	90% CONSTRUCTION	CDL
2	09/04/15	90% REVISIONS	CDL
3	09/22/15	100% CONSTRUCTION	CDL
4	10/12/15	REVISED 100% CD	JNC
5	03/23/16	REVISED 100% CD	CLG
6	05/03/16	REVISED 100% CD	MMR

W-T COMMUNICATION DESIGN GROUP, LLC.
WIRELESS INFRASTRUCTURE
8560 S. Eastern Ave. Suite 220
Las Vegas, NV 89123
PH: (702) 998-1000 FAX: (702) 998-1010
www.wtengineering.com

COPYRIGHT © 2016 W-T COMMUNICATION DESIGN GROUP, LLC.

PROJECT #: T1600022

PROPRIETARY INFORMATION

THE INFORMATION CONTAINED IN THIS SET OF DRAWINGS IS PROPRIETARY & CONFIDENTIAL TO VERIZON WIRELESS

ANY USE OR DISCLOSURE OTHER THAN AS IT RELATES TO VERIZON WIRELESS IS STRICTLY PROHIBITED

verizon
15505 SAND CANYON AVENUE, D1
IRVINE, CA 92618

JEFFERY S. GUTOWSKY, PE, SE
LICENSED STRUCTURAL ENGINEER
STATE OF CALIFORNIA
LICENSE # S5743
EXPIRES: 12/31/16 SIGNED:

GRAPEWIN
8306 GRAPEWIN STREET
EASTVALE, CA 92880

SHEET TITLE:
OVERALL SITE PLAN

C-1

ABBREVIATIONS & SYMBOLS

OVERALL SITE PLAN

SCALE: 1" = 40'-0"

1

GRAPEWIN 100%CD_rev6_5.3.16.dwg

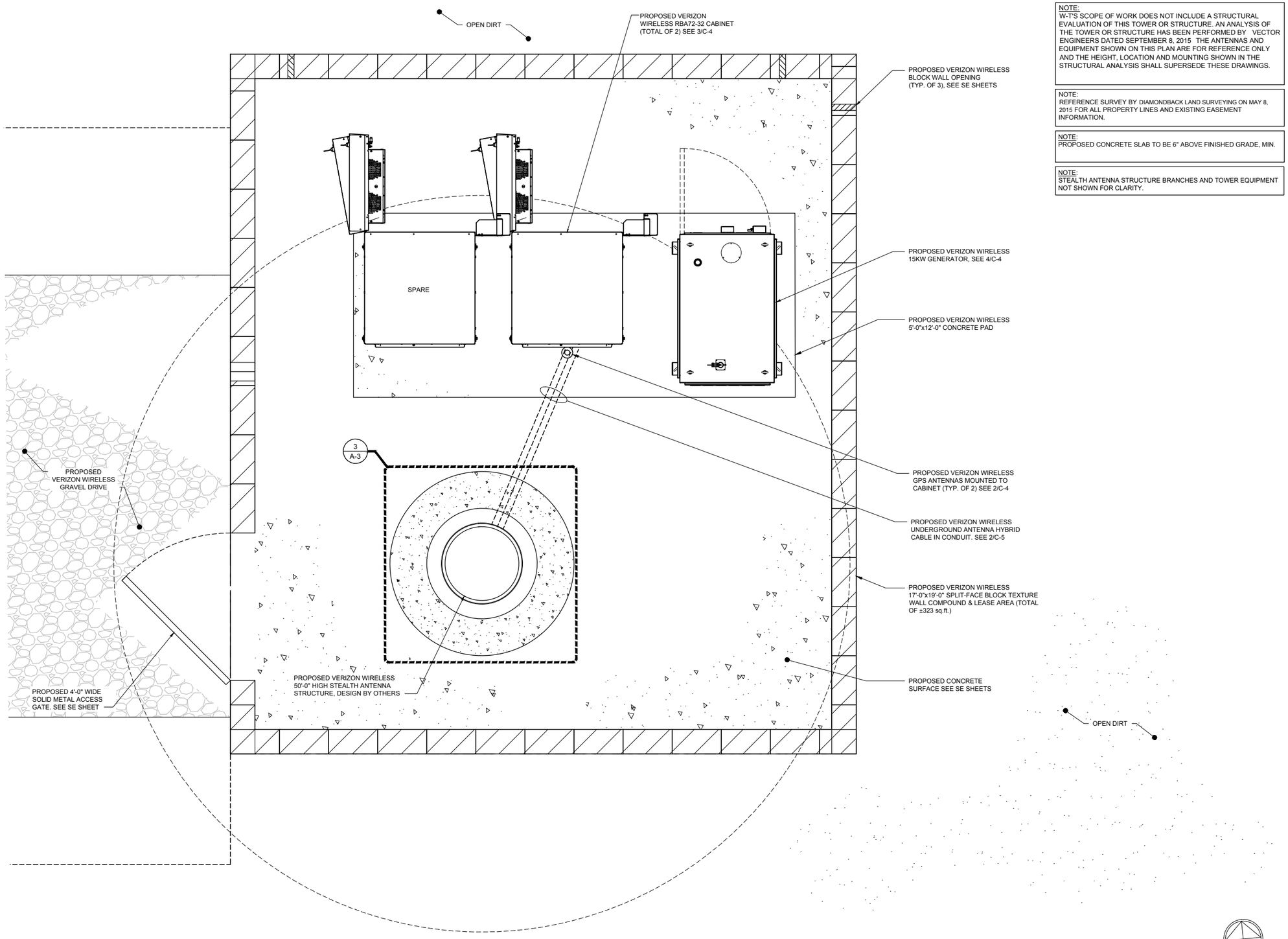

NOTE:
W-T'S SCOPE OF WORK DOES NOT INCLUDE A STRUCTURAL EVALUATION OF THIS TOWER OR STRUCTURE. AN ANALYSIS OF THE TOWER OR STRUCTURE HAS BEEN PERFORMED BY VECTOR ENGINEERS DATED SEPTEMBER 8, 2015 THE ANTENNAS AND EQUIPMENT SHOWN ON THIS PLAN ARE FOR REFERENCE ONLY AND THE HEIGHT, LOCATION AND MOUNTING SHOWN IN THE STRUCTURAL ANALYSIS SHALL SUPERSEDE THESE DRAWINGS.

NOTE:
REFERENCE SURVEY BY DIAMONDBACK LAND SURVEYING ON MAY 8, 2015 FOR ALL PROPERTY LINES AND EXISTING EASEMENT INFORMATION.

NOTE:
PROPOSED CONCRETE SLAB TO BE 6" ABOVE FINISHED GRADE, MIN.

NOTE:
STEALTH ANTENNA STRUCTURE BRANCHES AND TOWER EQUIPMENT NOT SHOWN FOR CLARITY.

ISSUE STATUS

REV.	DATE	DESCRIPTION	BY
1	08/03/15	90% CONSTRUCTION	CDL
2	09/04/15	90% REVISIONS	CDL
3	09/22/15	100% CONSTRUCTION	CDL
4	10/12/15	REVISED 100% CD	JNC
5	03/23/16	REVISED 100% CD	CLG
6	05/03/16	REVISED 100% CD	MMR

W-T
W-T COMMUNICATION DESIGN GROUP, LLC.
WIRELESS INFRASTRUCTURE
8560 S. Eastern Ave. Suite 220
Las Vegas, NV 89123
PH: (702) 998-1000 FAX: (702) 998-1010
www.wtengineering.com
COPYRIGHT © 2016 W-T COMMUNICATION DESIGN GROUP, LLC.
PROJECT #: T1600022

PROPRIETARY INFORMATION
THE INFORMATION CONTAINED IN THIS SET OF DRAWINGS IS PROPRIETARY & CONFIDENTIAL TO VERIZON WIRELESS
ANY USE OR DISCLOSURE OTHER THAN AS IT RELATES TO VERIZON WIRELESS IS STRICTLY PROHIBITED

verizon
15505 SAND CANYON AVENUE, D1
IRVINE, CA 92618

JEFFERY S. GUTOWSKY, PE, SE
LICENSED STRUCTURAL ENGINEER
STATE OF CALIFORNIA
LICENSE # S5743
EXPIRES: 12/31/16 SIGNED:

GRAPEWIN
8306 GRAPEWIN STREET
EASTVALE, CA 92880

SHEET TITLE:
ENLARGED SITE & EQUIPMENT PLAN

C-2

ENLARGED SITE PLAN

SCALE: 3/4"=1'-0"

NOTE: THE ORIGINAL SIZE OF THIS PLAN IS 36" X 24". 11"x17" PLOT WILL BE HALF SCALE UNLESS OTHERWISE NOTED.

GRAPEWIN 100%CD_rev6_5.3.16.dwg

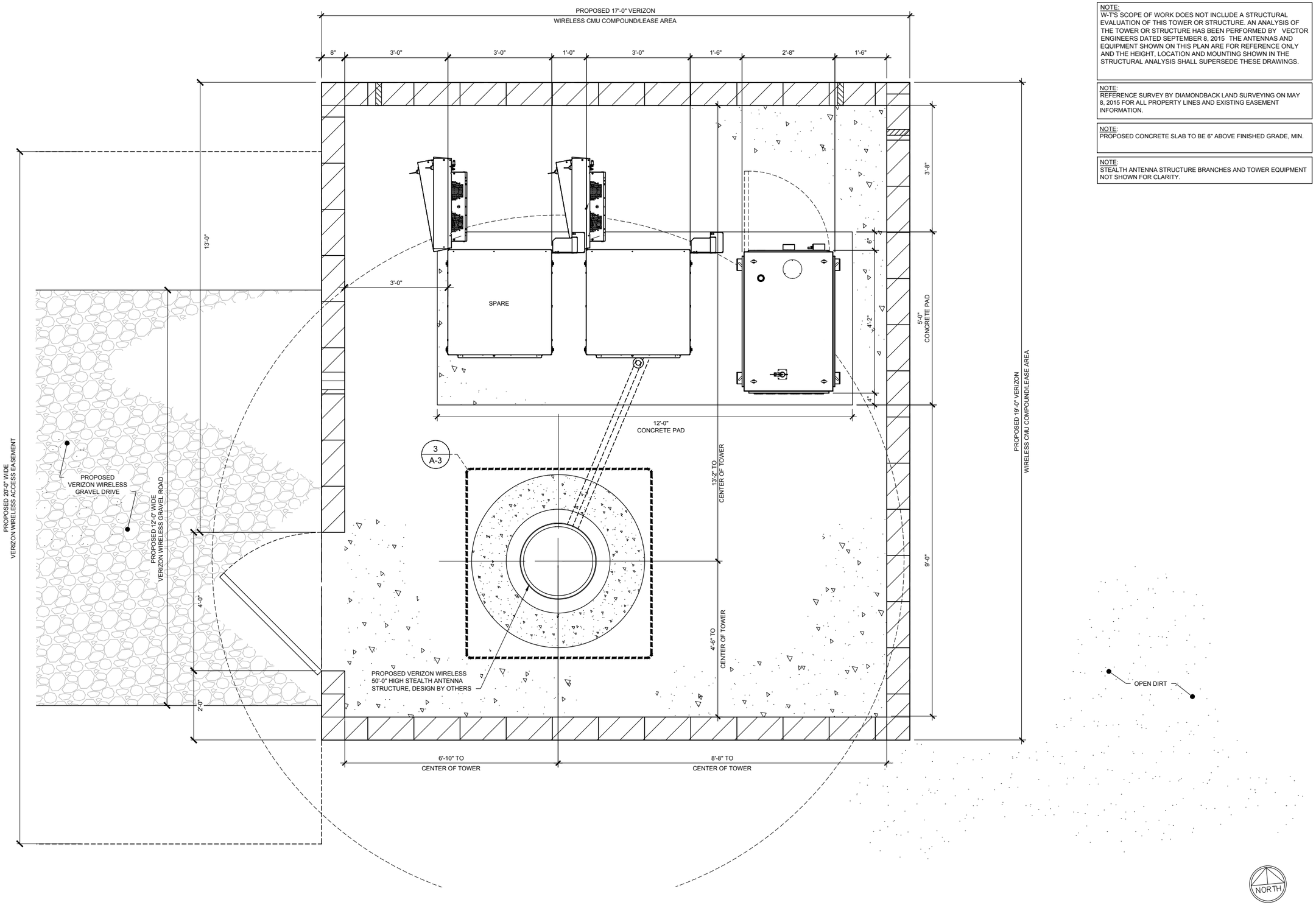

NOTE:
W-T'S SCOPE OF WORK DOES NOT INCLUDE A STRUCTURAL EVALUATION OF THIS TOWER OR STRUCTURE. AN ANALYSIS OF THE TOWER OR STRUCTURE HAS BEEN PERFORMED BY VECTOR ENGINEERS DATED SEPTEMBER 8, 2015 THE ANTENNAS AND EQUIPMENT SHOWN ON THIS PLAN ARE FOR REFERENCE ONLY AND THE HEIGHT, LOCATION AND MOUNTING SHOWN IN THE STRUCTURAL ANALYSIS SHALL SUPERSEDE THESE DRAWINGS.

NOTE:
REFERENCE SURVEY BY DIAMONDBACK LAND SURVEYING ON MAY 8, 2015 FOR ALL PROPERTY LINES AND EXISTING EASEMENT INFORMATION.

NOTE:
PROPOSED CONCRETE SLAB TO BE 6" ABOVE FINISHED GRADE, MIN.

NOTE:
STEALTH ANTENNA STRUCTURE BRANCHES AND TOWER EQUIPMENT NOT SHOWN FOR CLARITY.

ISSUE STATUS

REV.	DATE	DESCRIPTION	BY
1	08/03/15	90% CONSTRUCTION	CDL
2	09/04/15	90% REVISIONS	CDL
3	09/22/15	100% CONSTRUCTION	CDL
4	10/12/15	REVISED 100% CD	JNC
5	03/23/16	REVISED 100% CD	CLG
6	05/03/16	REVISED 100% CD	MMR

W-T
W-T COMMUNICATION
DESIGN GROUP, LLC.
WIRELESS INFRASTRUCTURE
8560 S. Eastern Ave. Suite 220
Las Vegas, NV 89123
PH: (702) 998-1000 FAX: (702) 998-1010
www.wtengineering.com
COPYRIGHT © 2016 W-T COMMUNICATION DESIGN GROUP, LLC.
PROJECT #: T1600022

PROPRIETARY INFORMATION

THE INFORMATION CONTAINED IN THIS SET OF DRAWINGS IS PROPRIETARY & CONFIDENTIAL TO VERIZON WIRELESS

ANY USE OR DISCLOSURE OTHER THAN AS IT RELATES TO VERIZON WIRELESS IS STRICTLY PROHIBITED

verizon
15505 SAND CANYON AVENUE, D1
IRVINE, CA 92618

JEFFERY S. GUTOWSKY, PE, SE
LICENSED STRUCTURAL ENGINEER
STATE OF CALIFORNIA
LICENSE # S5743
EXPIRES: 12/31/16 SIGNED:_____

GRAPEWIN
8306 GRAPEWIN STREET
EASTVALE, CA 92880

SHEET TITLE:
GEOMETRIC PLAN

C-3

GEOMETRIC PLAN

SCALE: 3/4"=1'-0"

1

NOTE: THE ORIGINAL SIZE OF THIS PLAN IS 36" X 24". 11"x17" PLOT WILL BE HALF SCALE UNLESS OTHERWISE NOTED.

GRAPEWIN 100%CD_rev6_5.3.16.dwg

LEGEND:

LOD	LIMIT OF DISTURBANCE
	EXISTING FLOW ARROW
XXX	PROPOSED CONTOUR
XXX.XX	EXISTING ELEVATION
XXX.XX	PROPOSED ELEVATION
	EXISTING CONTOUR
	NEW CONTOUR
	EXISTING ROLLING GATE
	EXISTING INLET
EOP	EDGE OF PAVEMENT
P/L	PROPERTY LINE
R/W	RIGHT-OF-WAY
℄	CENTERLINE
	EXISTING GATE
SF	SILT FENCE
	FLOW ARROW
U/T	UNDERGROUND TELEPHONE
U/E	UNDERGROUND ELECTRICAL
	EXISTING BLOCK WALL
	NEW BLOCK WALL
	EXISTING CURB & GUTTER
	EXISTING EARTHEN SWALE
	EXISTING CONCRETE WALKWAY
	EXISTING PAVER BLOCKS
	EXISTING UNPAVED AREA
	JOB SITE UNPAVED AREA
	EXISTING TREES/ FOLIAGE

NOTE:
REFERENCE SURVEY BY DIAMONDBACK LAND SURVEYING ON MAY 8, 2015 FOR ALL PROPERTY LINES AND EXISTING EASEMENT INFORMATION.

NOTE:
PROPOSED CONCRETE SLAB TO BE 6" ABOVE FINISHED GRADE, MIN.

NOTE:
STEALTH ANTENNA STRUCTURE BRANCHES AND TOWER EQUIPMENT NOT SHOWN FOR CLARITY.

GENERAL NOTES:

1. STRAW BALES SHALL BE PLACED IN A SINGLE ROW AND STAKED WITH MIN. 2 STAKES PER BALE. GAPS BETWEEN BALES SHALL BE CHINKED WITH STRAW. BACKFILL SOIL SHALL BE BUILT UP TO 4" AGAINST UPHILL SIDE OF BARRIER.
2. OTHER ACCEPTABLE EROSION CONTROL MEASURES ARE THE USE OF BERMS, SEDIMENT BASINS, FIBER MATES, NETTING, ETC. AS APPROVED BY MUNICIPAL ENGINEER.
3. EROSION CONTROL MEASURES SHALL BE CONTINUOUSLY MAINTAINED UNTIL PERMANENT EROSION CONTROL FEATURES ARE COMPLETED.
4. IF AFTER REPEATED FAILURE ON THE PART OF THE CONTRACTOR TO PROPERLY CONTROL EROSION, POLLUTION, AND/OR SILTATION, THE LOCAL JURISDICTION RESERVES THE RIGHT TO EFFECT NECESSARY CORRECTIVE MEASURES AND CHARGE ANY COSTS TO THE CONTRACTOR.
1. STREETS ADJACENT TO THE SITE SHALL BE KEPT FREE OF DIRT, MUD AND DEBRIS.
2. MINIMIZE BARE EARTH SURFACES DURING CONSTRUCTION.
3. ALL DISTURBED AREAS SHALL BE SEEDED OR SODDED AS SOON AS IS PRACTICABLE.
4. WHENEVER DURING CONSTRUCTION OPERATIONS ANY LOOSE MATERIALS IS DEPOSITED IN THE FLOW LINE OF GUTTERS, DRAINAGE STRUCTURES, OR DITCHES SUCH THAT THE NATURAL FLOW LINE OF WATER IS OBSTRUCTED, THIS LOOSE MATERIAL SHALL BE REMOVED.
5. ALL SEDIMENT WILL BE PREVENTED FROM ENTERING ANY EXISTING STORM DRAINAGE SYSTEMS BY THE USE OF SAND BAGS, INTERCEPTOR DIKES OR OTHER APPROVED FUNCTIONAL METHODS. THE CONTRACTOR SHALL BE RESPONSIBLE FOR REMOVING SEDIMENT RESULTING FROM HIS PROJECT FROM STORM SEWERS AND DRAINAGE STRUCTURES.
6. CONSTRUCTION ACCESS POINTS TO THE SITE SHALL BE PROTECTED IN SUCH A WAY AS TO PREVENT TRACKING OF MUD OR SOIL ONTO PUBLIC THOROUGHFARES. AT THE END OF EACH DAY THE CONTRACTOR SHALL CLEAN UP ALL MUD OR SOIL WHICH HAS BEEN TRACKED ONTO PUBLIC STREETS OR AS REQUIRED BY LOCAL JURISDICTION.
7. ALL EXISTING DRAINAGE COURSES ON THE PROJECT SITE MUST CONTINUE TO FUNCTION, ESPECIALLY DURING STORM CONDITIONS. PROTECTIVE MEASURES AND TEMPORARY DRAINAGE PROVISIONS MUST BE USED TO PROTECT ADJOINING PROPERTIES DURING GRADING OPERATIONS.

CONSTRUCTION NOTES

1. NOTE TO CONTRACTORS: THE EXISTENCE AND LOCATION OF ANY UNDERGROUND UTILITY PIPES OR STRUCTURES SHOWN ON THESE PLANS WERE OBTAINED BY A SEARCH OF AVAILABLE RECORDS. APPROVAL OF THESE PLANS BY THE LOCAL JURISDICTION DOES NOT CONSTITUTE A REPRESENTATION AS TO THE ACCURACY OR COMPLETENESS OF THE LOCATION, NOR THE EXISTENCE OR NON-EXISTENCE OF ANY UNDERGROUND UTILITY, PIPE OR STRUCTURE WITHIN THE LIMITS OF THE PROJECT. THE CONTRACTOR IS REQUIRED TO TAKE ALL DUE PRECAUTIONARY MEASURES FOR THE PROTECTION OF ALL UTILITIES, PIPES OR STRUCTURES, WHETHER SHOWN ON THESE PLANS OR NOT. ANY UTILITY(IES) DAMAGED DURING THE PERFORMANCE OF THE WORK SHALL BE REPAIRED OR REPLACED TO THE SATISFACTION OF THE GOVERNING AGENCY BY THE CONTRACTOR, AT HIS EXPENSE.
2. ALL WORK SHALL CONFORM TO CITY CODES, STANDARD SPECIFICATIONS FOR PUBLIC WORKS (LATEST EDITION), AND STANDARD DRAWING OF THE COUNTY OF THE LOCAL JURISDICTION. IT IS THE CONTRACTOR'S RESPONSIBILITY TO BE FAMILIAR WITH THESE STANDARDS AND CODES AT ALL TIMES.
3. THE CONTRACTOR SHALL NOTIFY THE CITY PUBLIC WORKS INSPECTOR, FORTY-EIGHT (48) HOURS PRIOR TO BEGINNING ANY WORK.
4. CONTRACTOR SHALL MAINTAIN TRAFFIC CONTROL IN ACCORDANCE WITH CALTRANS TRAFFIC MANUAL AND WATCH MANUAL AT ALL TIMES DURING CONSTRUCTION, AS APPROVED BY THE CITY ENGINEER OR HIS REPRESENTATIVE. FAILURE TO DO SO SHALL REQUIRE IMMEDIATE WORK STOPPAGE.
5. IT SHALL BE THE CONTRACTOR'S RESPONSIBILITY TO HAVE A DEPENDABLE REPRESENTATIVE AT THE JOB SITE, AT ALL TIMES DURING CONSTRUCTION.
6. IT SHALL BE THE RESPONSIBILITY OF THE CONTRACTOR TO ARRANGE FOR THE NECESSARY RELOCATION OF ANY UTILITIES. CONTRACTOR SHALL NOTIFY ALL UTILITY COMPANIES INVOLVED, AT LEAST FORTY-EIGHT (48) HOURS PRIOR TO BEGINNING WORK. THE CONTRACTOR SHALL ALSO CONTACT UNDERGROUND SERVICE ALERT (U.S.A.) AT 1-800-422-4133, AT LEAST FORTY-EIGHT (48) HOURS PRIOR TO BEGINNING WORK.
7. THE CONTRACTOR SHALL BE RESPONSIBLE FOR THE CLEARING OF THE PROPOSED WORK AREA AND RELOCATION AND COST OF ALL EXISTING UTILITIES. SUBDIVIDER MUST INFORM THE LOCAL JURISDICTION OF CONSTRUCTION SCHEDULE, PRIOR TO BEGINNING CONSTRUCTION.
8. ALL UNDERGROUND FACILITIES AND LATERALS INCLUDING BUT NOT LIMITED TO SEWER, WATER, TELEPHONE, ELECTRICITY, GAS AND DRAINAGE FACILITIES, SHALL BE IN PLACE PRIOR TO PAVING THE STREET SECTION.
9. ALL STREET SECTIONS ARE TENTATIVE. ADDITIONAL SOIL TESTS WILL BE TAKEN AFTER ROUGH GRADING, TO DETERMINE THE EXACT SECTION REQUIRED. SECTION THICKNESSES SHOWN ARE FOR BONDING PURPOSES ONLY.
10. ALL EXISTING UNDERGROUND UTILITIES AND STRUCTURES MUST BE POTHOLED AND ELEVATIONS VERIFIED PRIOR TO CONSTRUCTION. THE ENGINEER OF RECORD SHALL BE NOTIFIED OF ANY NECESSARY REVISIONS TO THE APPROVED PLANS. THE REVISIONS SHALL BE IN THE FORM OF "AS BUILT" PLANS SUBMITTED TO THE CITY ENGINEER FOR APPROVAL PRIOR TO THE FINAL ACCEPTANCE OF THE PROJECT.
11. ALL EXISTING MONUMENTATION DISTURBED OR DESTROYED DURING CONSTRUCTION SHALL BE REPLACED TO CITY STANDARDS, AS APPROVED BY THE CITY ENGINEER. CENTERLINE TIES ARE TO BE FURNISHED TO THE CITY ENGINEER UPON COMPLETION OF THE PROJECT AND BEFORE ACCEPTANCE IS GRANTED.
12. AN ENCROACHMENT PERMIT SHALL BE REQUIRED FOR ALL CONSTRUCTION WORK DONE WITHIN PUBLIC RIGHTS-OF-WAY. BEFORE ISSUANCE OF SAID PERMIT, THE CONTRACTOR/DEVELOPER MUST PROVIDE THE CITY ENGINEER WITH CERTIFICATE OF INSURANCE AND REQUIRED BONDING FOR PUBLIC IMPROVEMENTS. THE ENCROACHMENT PERMIT MUST BE PRESENT AT THE JOB SITE DURING THE TOTAL TIME OF THE PROJECT CONSTRUCTION ALONG WITH AN APPROVED SET OF IMPROVEMENT PLANS.
13. IF AN ENCROACHMENT PERMIT IS REQUIRED THROUGH THE DISTRICT NO. 8 OFFICE OF CALTRANS, PLEASE MAKE REFERENCE TO THIS FACT IN THE "GENERAL NOTES" SECTION OF THE IMPROVEMENT PLANS. 14. ALL SETBACK REQUIREMENTS MUST BE FOLLOWED AS OUTLINED IN THE U.B.C., CHAPTER 33.

LEGEND AND NOTES

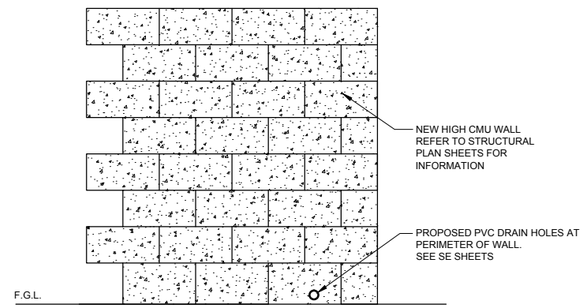

PVC DRAIN HOLE DETAIL | SCALE: NONE | 1

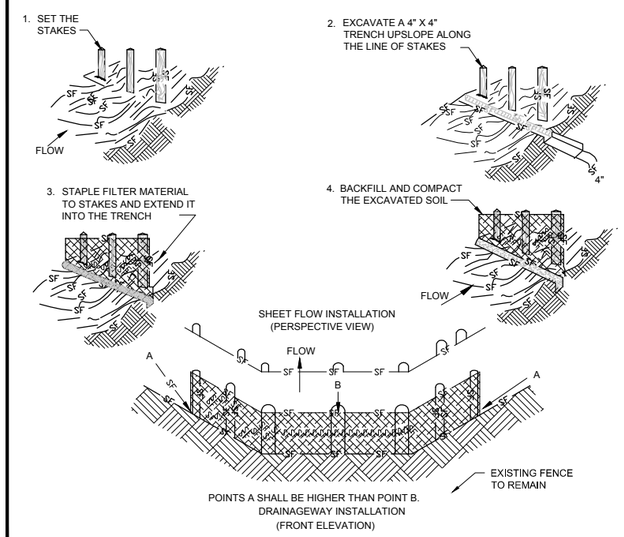

SILT FENCE | SCALE: NONE | 2

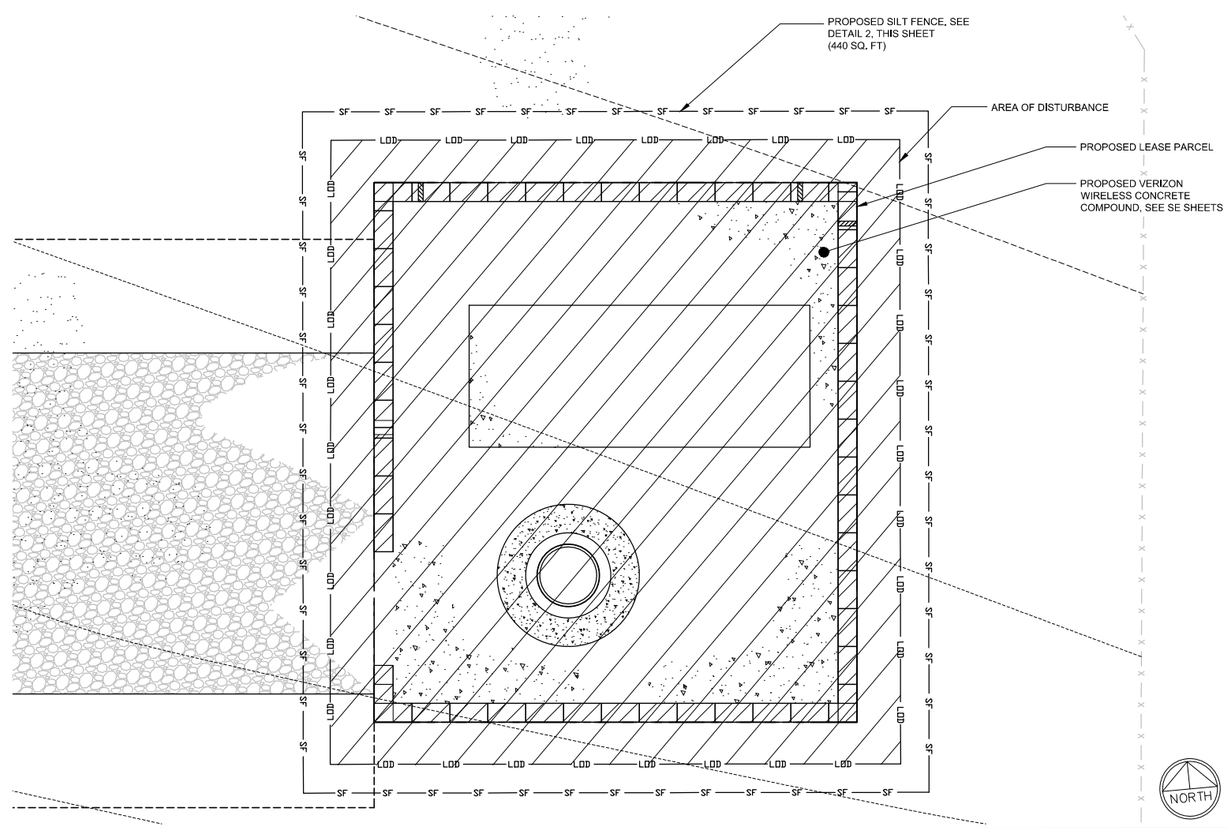

EROSION CONTROL | SCALE: 3/8" = 1'-0" | 3

ISSUE STATUS

REV.	DATE	DESCRIPTION	BY
1	08/03/15	90% CONSTRUCTION	CDL
2	09/04/15	90% REVISIONS	CDL
3	09/22/15	100% CONSTRUCTION	CDL
4	10/12/15	REVISED 100% CD	JNC
5	03/23/16	REVISED 100% CD	CLG
6	05/03/16	REVISED 100% CD	MMR

W-T COMMUNICATION DESIGN GROUP, LLC.
WIRELESS INFRASTRUCTURE
8560 S. Eastern Ave. Suite 220
Las Vegas, NV 89123
PH: (702) 998-1000 FAX: (702) 998-1010
www.wtengineering.com

COPYRIGHT © 2016 W-T COMMUNICATION DESIGN GROUP, LLC.
PROJECT #: T1600022

PROPRIETARY INFORMATION

THE INFORMATION CONTAINED IN THIS SET OF DRAWINGS IS PROPRIETARY & CONFIDENTIAL TO VERIZON WIRELESS

ANY USE OR DISCLOSURE OTHER THAN AS IT RELATES TO VERIZON WIRELESS IS STRICTLY PROHIBITED

verizon
15505 SAND CANYON AVENUE, D1
IRVINE, CA 92618

JEFFERY S. GUTOWSKY, PE, SE
LICENSED STRUCTURAL ENGINEER
STATE OF CALIFORNIA
LICENSE # S5743
EXPIRES: 12/31/16 SIGNED:____

GRAPEWIN
8306 GRAPEWIN STREET
EASTVALE, CA 92880

SHEET TITLE:
EROSION CONTROL PLAN, NOTES & DETAILS

C-3.1

NOTE: THE ORIGINAL SIZE OF THIS PLAN IS 30" X 24". 11"x17" PLOT WILL BE HALF SCALE UNLESS OTHERWISE NOTED

GRAPEWIN 100%CD_rev6_5.3.16.dwg

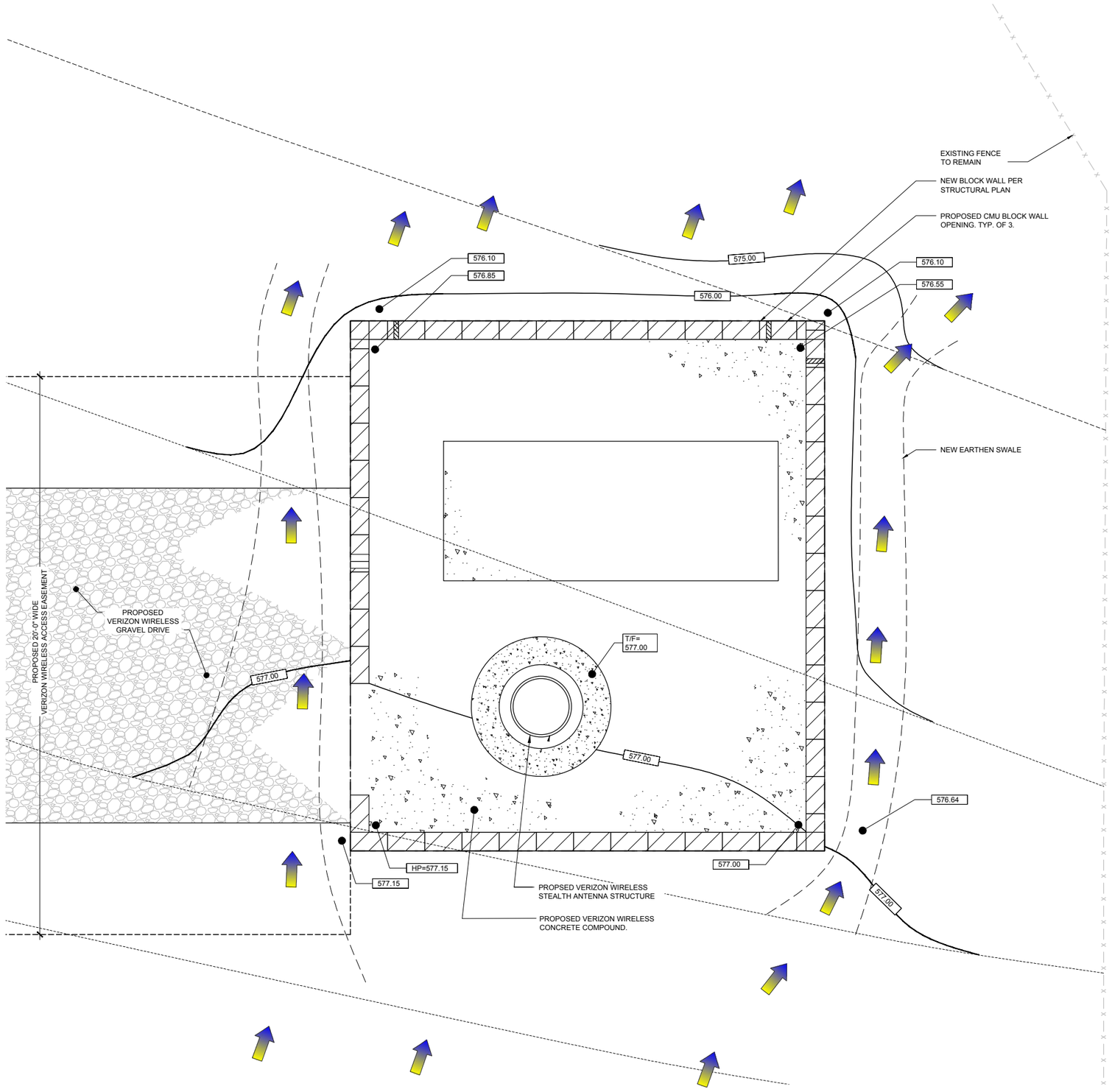

NOTE:
EXISTING FLOW OF EXISTING PROPERTY SHALL NOT BE DISTURBED DURNING CONSTRUCTION

NOTE:
EXISTING SITE SURFACE DRAINS ACROSS NATURAL SLOPE

TOTAL AREA OF DISTURBANCE=440 SQ.FT.

NOTE:
REFERENCE SURVEY BY DIAMONDBACK LAND SURVEYING ON MAY 8, 2015 FOR ALL PROPERTY LINES AND EXISTING EASEMENT INFORMATION.

NOTE:
PROPOSED CONCRETE SLAB TO BE 6" ABOVE FINISHED GRADE, MIN.

NOTE:
THIS PLAN SHOWS THE INTENDED GRADING NECESSARY FOR A NEW TELECOMMUNICATION COMPOUND.

LEGEND:

LOD	LIMIT OF DISTURBANCE	SF	SILT FENCE
	EXISTING FLOW ARROW		FLOW ARROW
XXX	PROPOSED CONTOUR	U/T	UNDERGROUND TELEPHONE
XXX.XX	EXISTING ELEVATION	U/E	UNDERGROUND ELECTRICAL
XXX.XX	PROPOSED ELEVATION		EXISTING BLOCK WALL
	EXISTING CONTOUR		NEW BLOCK WALL
	NEW CONTOUR		EXISTING CURB & GUTTER
	EXISTING ROLLING GATE		EXISTING EARTHEN SWALE
	EXISTING INLET		EXISTING CONCRETE WALKWAY
EOP	EDGE OF PAVEMENT		EXISTING PAVER BLOCKS
P/L	PROPERTY LINE		EXISTING UNPAVED AREA
R/W	RIGHT-OF-WAY		JOB SITE UNPAVED AREA
℄	CENTERLINE		EXISTING TREES/ FOLIAGE
	EXISTING GATE		

NORTH

ISSUE STATUS

REV.	DATE	DESCRIPTION	BY
1	08/03/15	90% CONSTRUCTION	CDL
2	09/04/15	90% REVISIONS	CDL
3	09/22/15	100% CONSTRUCTION	CDL
4	10/12/15	REVISED 100% CD	JNC
5	03/23/16	REVISED 100% CD	CLG
6	05/03/16	REVISED 100% CD	MMR

W-T
W-T COMMUNICATION
DESIGN GROUP, LLC.
WIRELESS INFRASTRUCTURE
8560 S. Eastern Ave. Suite 220
Las Vegas, NV 89123
PH: (702) 998-1000 FAX: (702) 998-1010
www.wtengineering.com
COPYRIGHT © 2016 W-T COMMUNICATION DESIGN GROUP, LLC.
PROJECT #: T1600022

PROPRIETARY INFORMATION
THE INFORMATION CONTAINED IN THIS SET OF DRAWINGS IS PROPRIETARY & CONFIDENTIAL TO VERIZON WIRELESS

ANY USE OR DISCLOSURE OTHER THAN AS IT RELATES TO VERIZON WIRELESS IS STRICTLY PROHIBITED

verizon
15505 SAND CANYON AVENUE, D1
IRVINE, CA 92618

JEFFERY S. GUTOWSKY, PE, SE
LICENSED STRUCTURAL ENGINEER
STATE OF CALIFORNIA
LICENSE # S5743
EXPIRES: 12/31/16 SIGNED:____

GRAPEWIN
8306 GRAPEWIN STREET
EASTVALE, CA 92880

SHEET TITLE:
GRADING PLAN

C-3.2

GRADING PLAN

SCALE: 1/4" = 1'-0"

1

NOTE: THE ORIGINAL SIZE OF THIS PLAN IS 36" X 24". 11"x17" PLOT WILL BE HALF SCALE UNLESS OTHERWISE NOTED

GRAPEWIN 100%CD_rev6_5.3.16.dwg

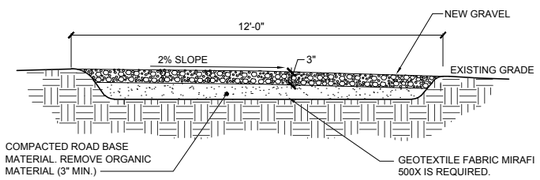

EARTH WORK SUBGRADE
COMPACTION & SELECT GRANULAR FILL
CONTRACTOR SHALL BE RESPONSIBLE FOR CLEARING & GRUBBING THE CONSTRUCTION SITE AND ROADWAY AREAS WHERE APPLICABLE

ALL SELECT GRANULAR FILL SHALL BE COMPACTED TO A 95% COMPACTION AT A MAXIMUM DRY DENSITY AS DETERMINED BY ASTM D-1557 OR WITHIN PLUS OR MINUS 3% OF OPTIMUM MOISTURE CONTENT.

GRAVEL DRIVEWAY DETAIL | SCALE: N.T.S. | 1

NOTE:
CONTRACTOR TO VERIFY GPS ATTACHMENT DOES NOT VOID CABINET WARRANTY PRIOR TO INSTALLATION

NOTE:
CONTRACTOR TO ATTACH PROPOSED 1" O.D. GALV. PIPE TO CABINET WITH (4) 8MMx15MM STAINLESS STEEL BOLTS AND (4) 1" PIPE STRAPS

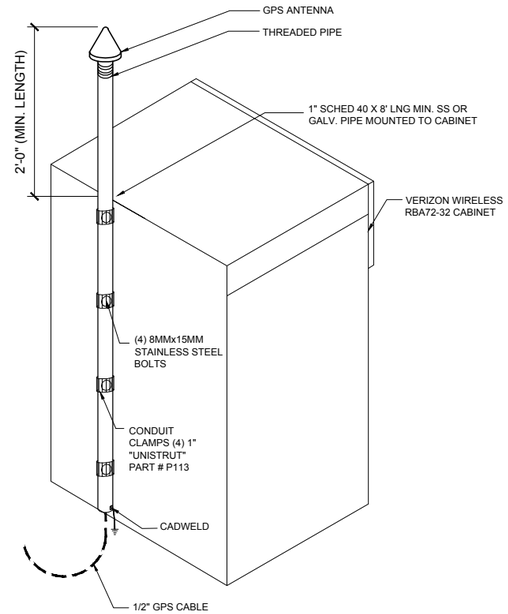

GPS ANTENNA MOUNT | SCALE: N.T.S. | 2

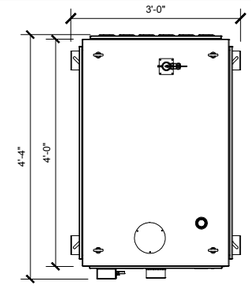

TOP VIEW

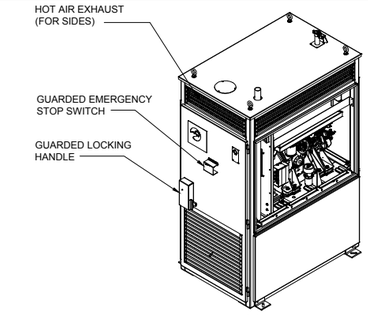

ISO VIEW

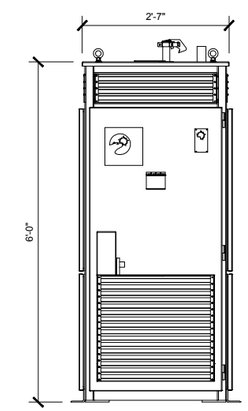

FRONT VIEW

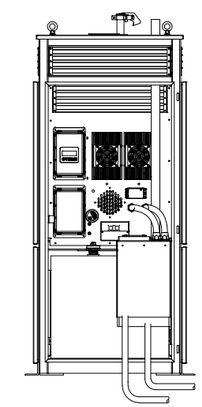

FRONT VIEW
(DOOR REMOVED FOR CLARITY)

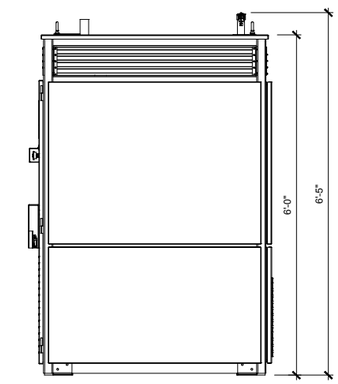

RIGHT VIEW

NOTE:
FOR TYPICAL EQUIPMENT CABINET ANCHORAGE, SEE 5/C-5

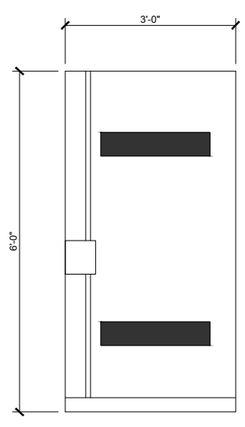

FRONT VIEW

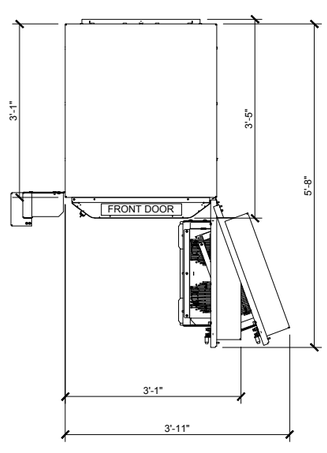

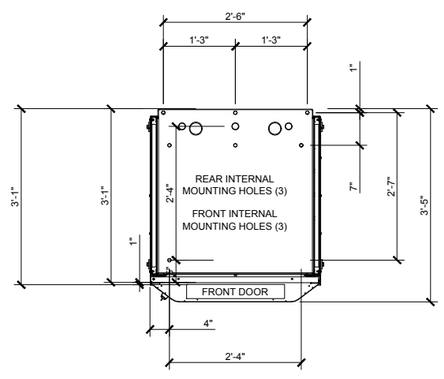

RBA-72-32 CABINET DETAIL | SCALE: N.T.S. | 3

NOTE:
FOR TYPICAL EQUIPMENT CABINET ANCHORAGE, SEE 5/C-5

NOTE:
PROPOSED GENERATOR EXHAUST TO BE EXTENDED 2'-0" ABOVE CABINET

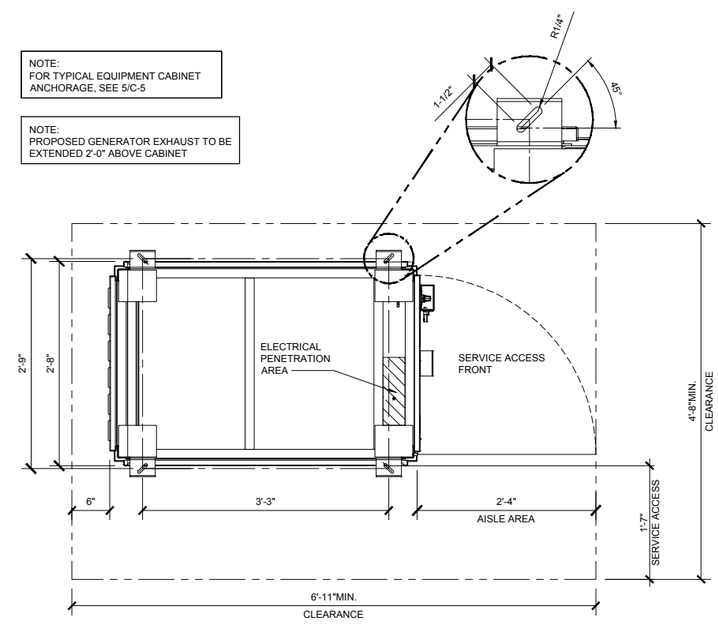

BOLT PATTERN

MODEL NO. 88-25-0603 GENERATOR | SCALE: N.T.S. | 4

ISSUE STATUS

REV.	DATE	DESCRIPTION	BY
1	08/03/15	90% CONSTRUCTION	CDL
2	09/04/15	90% REVISIONS	CDL
3	09/22/15	100% CONSTRUCTION	CDL
4	10/12/15	REVISED 100% CD	JNC
5	03/23/16	REVISED 100% CD	CLG
6	05/03/16	REVISED 100% CD	MMR

W-T COMMUNICATION DESIGN GROUP, LLC.
WIRELESS INFRASTRUCTURE
8560 S. Eastern Ave. Suite 220
Las Vegas, NV 89123
PH: (702) 998-1000 FAX: (702) 998-1010
www.wtengineering.com
COPYRIGHT © 2016 W-T COMMUNICATION DESIGN GROUP, LLC.
PROJECT #: T1600022

PROPRIETARY INFORMATION

THE INFORMATION CONTAINED IN THIS SET OF DRAWINGS IS PROPRIETARY & CONFIDENTIAL TO VERIZON WIRELESS

ANY USE OR DISCLOSURE OTHER THAN AS IT RELATES TO VERIZON WIRELESS IS STRICTLY PROHIBITED

verizon

15505 SAND CANYON AVENUE, D1
IRVINE, CA 92618

JEFFERY S. GUTOWSKY, PE, SE
LICENSED STRUCTURAL ENGINEER
STATE OF CALIFORNIA
LICENSE # S5743
EXPIRES: 12/31/16 SIGNED:____

GRAPEWIN
8306 GRAPEWIN STREET
EASTVALE, CA 92880

SHEET TITLE:
EQUIPMENT SPECIFICATIONS

C-4

NOTE: THE ORIGINAL SIZE OF THIS PLAN IS 36" X 24". 11"x17" PLOT WILL BE HALF SCALE UNLESS OTHERWISE NOTED

NOT USED | SCALE: N.T.S. | 1

NOT USED | SCALE: N.T.S. | 2

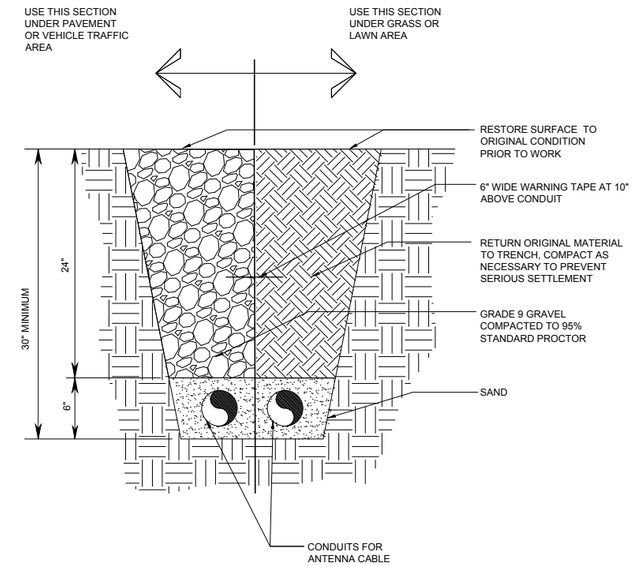

UNDERGROUND ANTENNA CABLE DETAIL | SCALE: N.T.S. | 2

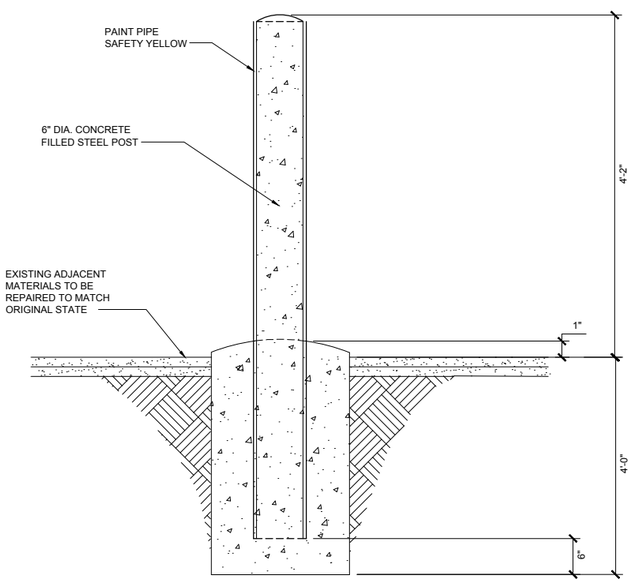

BOLLARD DETAIL | SCALE: N.T.S. | 3

NOTE:
CONTRACTOR TO VERIFY GPS ATTACHMENT DOES NOT VOID EQUIPMENT CABINET WARRANTY PRIOR TO INSTALLATION

NOTE:
CONTRACTOR TO ATTACH PROPOSED 1" O.D. GALV. PIPE TO CABINET WITH (4) 8MMx15MM STAINLESS STEEL BOLTS AND (4) 1" PIPE STRAPS

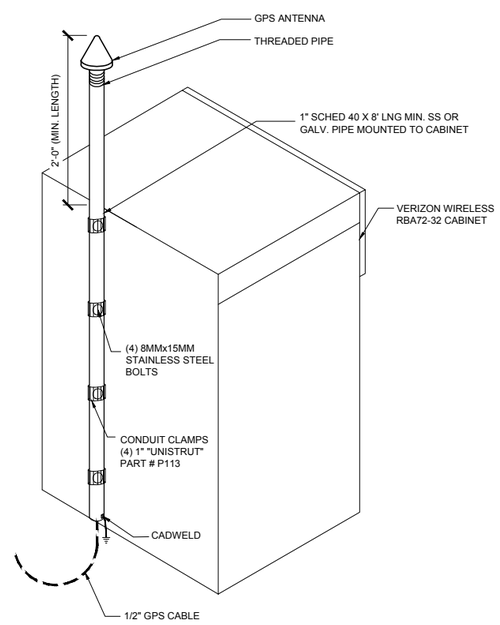

GPS ANTENNA MOUNT | SCALE: N.T.S. | 4

NOT USED | SCALE: N.T.S. | 5

ISSUE STATUS

REV.	DATE	DESCRIPTION	BY
1	08/03/15	90% CONSTRUCTION	CDL
2	09/04/15	90% REVISIONS	CDL
3	09/22/15	100% CONSTRUCTION	CDL
4	10/12/15	REVISED 100% CD	JNC
5	03/23/16	REVISED 100% CD	CLG
6	05/03/16	REVISED 100% CD	MMR

W-T COMMUNICATION DESIGN GROUP, LLC.
WIRELESS INFRASTRUCTURE
8560 S. Eastern Ave. Suite 220
Las Vegas, NV 89123
PH: (702) 998-1000 FAX: (702) 998-1010
www.wtengineering.com

COPYRIGHT © 2016 W-T COMMUNICATION DESIGN GROUP, LLC
PROJECT #: T1600022

PROPRIETARY INFORMATION

THE INFORMATION CONTAINED IN THIS SET OF DRAWINGS IS PROPRIETARY & CONFIDENTIAL TO VERIZON WIRELESS

ANY USE OR DISCLOSURE OTHER THAN AS IT RELATES TO VERIZON WIRELESS IS STRICTLY PROHIBITED

verizon

15505 SAND CANYON AVENUE, D1
IRVINE, CA 92618

JEFFERY S. GUTOWSKY, PE, SE
LICENSED STRUCTURAL ENGINEER
STATE OF CALIFORNIA
LICENSE # S5743
EXPIRES: 12/31/16 SIGNED:

GRAPEWIN
8306 GRAPEWIN STREET
EASTVALE, CA 92880

SHEET TITLE:
SITE DETAILS

C-5

NOTE: THE ORIGINAL SIZE OF THIS PLAN IS 36" X 24". 11"x17" PLOT WILL BE HALF SCALE UNLESS OTHERWISE NOTED

GRAPEWIN 100%CD_rev6_5.3.16.dwg

LANDSCAPING GENERAL NOTES:

ALL PLACEMENT OF LANDSCAPING SHALL MEET THE FOLLOWING CONDITIONS:

ALL PLANT MATERIAL SHALL BE PLANTED IN A MANNER WHICH IS NOT TO INTERFERE WITH OVERHEAD WIRES OR BE INTRUSIVE TO UTILITIES OR PAVEMENT.

NO TREES OR OTHER LANDSCAPING SHALL BE LOCATED CLOSER THAN 10 FEET TO A FIRE HYDRANT OR OTHER ABOVE GROUND UTILITIES.

NO LANDSCAPING SHALL INTERFERE WITH SITE REQUIREMENTS FOR SAFE INGRESS AND EGRESS.

NOTE:
- ANY AREA ALTERED FROM CONSTRUCTION TO BE RETURNED TO ITS ORIGINAL STATE. GRASS AREA SHALL BE SEEDED AND MAINTAINED UNTIL SEEDS HAVE GERMINATED.
- REFERENCE SURVEY BY DIAMONDBACK LAND SURVEYING DATED FEBRUARY 10, 2015 FOR ALL EASEMENT & LEASE DESCRIPTIONS

INSTALLATION STANDARDS:

1. PLANT MATERIAL SHALL CONFORM WITH THE CURRENT AMERICAN STANDARDS FOR NURSERY STOCK, PUBLISHED BY THE AMERICAN ASSOCIATION OF NURSERYMEN FOR THAT TYPE OF TREE OR SHRUB AT THE TIME OF INSTALLATION.
2. ALL TREES SHALL BE GROWN IN A NURSERY LOCATED IN THE STATE OF CALIFORNIA.
3. ALL PLANT MATERIAL SHALL BE INSTALLED FREE OF DISEASE AND IN A MANNER THAT ENSURES THE AVAILABILITY OF SUFFICIENT SOIL AND WATER TO SUBSTAIN HEALTHY GROWTH.
4. ALL TAGS, WIRES, PLASTIC TIES AND ROPE SHALL BE CUT FROM EACH TREE TO PREVENT GIRDLING OF THE TREE. THE BURLAP SHALL BE PULLED BACK FROM THE UPPER THIRD OF THE ROOTBALL. IF A PLASTIC 'BURLAP' IS USED, IT SHALL BE REMOVED IN ITS ENTIRETY FROM THE ROOTBALL.
5. ALL PLANT MATERIAL SHALL BE PLANTED WITH A MINIMUM OF DEPTH OF THREE (3) INCHES OF MULCHED MATERIAL AND A DIAMETER OF THREE (3) AROUND THE BASE OF THE TREE.
6. TREES SHALL BE STAKED WITH POSTS AND NOT STAKES IN AREAS OF HIGH WIND FOR ONE TO THREE YEARS TO ALLOW THE GROWTH OF PROPOSED ROOTS TO STABILIZE. ALL ROPES SHALL BE COVERED TO PREVENT CUTTING INTO THE BARK.
7. ANY EXCESS SOIL, CLAY, OR CONSTRUCTION DEBRIS SHALL BE REMOVED FROM THE PLANTING SITE, PRIOR TO PLANTING OF INDIVIDUAL TREES AT FINAL GRADE.
8. THE JURISDICTION, AT ITS DISCRETION, HAS THE RIGHT TO RETAIN A PROFESSIONAL LANDSCAPE ARCHITECT OR ARBORIST TO REVIEW SUBMITTED LANDSCAPE PLAN AND THE PROFESSIONAL LANDSCAPE ARCHITECT OR ARBORIST WILL SUBMIT A WRITTEN REPORT TO THE PLANNING AND ZONING COMMISSION. ALL EXPENSES INCURRED BY THE JURISDICTION FOR THE USE OF THE LANDSCAPE ARCHITECT OR ARBORIST SHALL BE REIMBURSED BY THE DEVELOPER.

PLANTING SEASONS:

1. PLANTS MUST BE PLANTED DURING THE FOLLOWING DATES: APRIL 1ST TO MAY 15TH AND SEPTEMBER 1ST TO OCTOBER 15T
2. THE PLANTING PERIODS INDICATED MAY BE EXTENDED DUE TO WEATHER CONDITIONS OR OTHER FACTORS, WHICH MUST BE APPROVED BY THE LANDSCAPE ARCHITECT/ENGINEER.
3. THE CONTRACTOR WILL BE RELIEVED OF HIS GUARANTEE RESPONSIBILITY SOULD THE OWNER REQUIRE PLANT MATERIAL INSTALLATIONS TO BE COMPLETED DURING OTHER TIMES THAN THE PLANTING PERIODS INDICATED.

PLANTING:

1. ALL SHADE TREES, ORNAMENTAL TREES, EVERGREEN TREES AND SHRUBS SHALL BE PLANTED IN HOLES EXCAVATED AT LEAST 3x THE WIDTH OF THE DIAMETER OF THE BALL OR CONTAINER AND DEEP ENOUGH SO THAT THE TOP OF THE BALL OR SOIL IN THE CONTAINER IS AT OR JUST ABOVE EXISTING GRADE.
2. ALL TWINE OR ROPE MUST BE CUT AND REMOVED AND THE BURLAP FOLDED AWAY FROM THE TOP OF THE BALL. THE EXCAVATION MUST BE BACKFILLED WITH THE PLANTING MIXTURE AND WATERED. ANY SETTLEMENT WILL BE FILLED WITH PLANTING MIXTURE.
3. A 4" DEEP SAUCER, SIMILAR TO THE DIAMETER OF THE PLANTING HOLE SHALL BE CREATED USING PLANTING MIX.
4. PLANTING MIX TO CONSIST OF 1/3 TOP SOIL, 1/3 SOIL FROM EXCAVATION, AND 1/3 MUSHROOM COMPOST (OR 1/3 PEAT MOSS).

CLEAN UP:

1. ALL DEBRIS GENERATED DURING THE INSTALLATION OF PLANT MATERIALS MUST BE REMOVED FROM THE SITE.
2. ALL PAVEMENTS AND WALKS MUST BE SWEPT AFTER EACH DAYS WORK. UPON COMPLETION OF THE WORK, ALL PAVEMENTS MUST BE WASHED TO REMOVAL MUD OR DIRT.

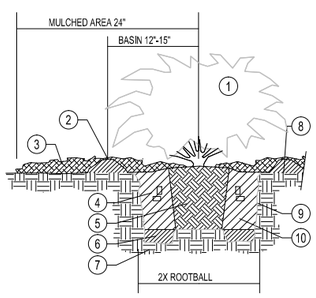

SECTION VIEW - N.T.S.

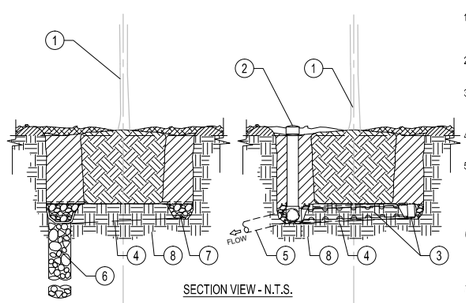

SECTION VIEW - N.T.S.

1. PLANT, SET TOP OF ROOTBALL 1-2" ABOVE FINISH GRADE- SEE PLANT PIT DETAIL
2. 4" OBSERVATION STANDPIPE WITH THREADED REMOVABLE CAP
3. 4" DIA. PERFORATED PVC PIPE "U", DRAIN TOWARDS OUTLET, WRAP IN FILTER FABRIC
4. SLOPE PIT BOTTOM TO DRAIN TOWARDS OBS. STANDPIPE-SUMP
5. 4" DRAIN PIPE OUTLET TO LANDSCAPE DRAIN SYSTEM OR DAYLIGHT DOWNHILL INTO 1CU. FT. GRAVEL DISSIPATOR WRAPPED IN FILTER CLOTH- BURIED
6. AUGER 8" DIA. HOLE 6' DEEP OR BELOW HARDPAN LAYER. FILL WITH GRAVEL. VERIFY POSITIVE DRAINAGE BEFORE PLANTING.
7. GRAVEL LAYER AT BOTTOM COVERED WITH FILTER CLOTH
8. NATIVE GRADE

PERCOLATION TEST

DIG A HOLE 12 INCHES WIDE AND DEEP, SCARIFY SIDES AND BOTTOM. FILL THE HOLE WITH WATER TO PRE MOISTEN THE SOIL (IMPORTANT FOR ACCURATE TEST). THE NEXT DAY RE-FILL THE HOLE, MEASURE HOURLY-IF THE WATER TAKES FROM THREE TO 12 HOURS TO DRAIN, THEN THE DRAINAGE IS ADEQUATE FOR MOST LANDSCAPE PLANTS (ABOUT 1 INCH PER HOUR). IF IT TAKES MORE THAN 12 HOURS, THEN THE DRAINAGE IS POOR. BUT BEFORE CORRECTIVE ACTION IS TAKEN, DIG DEEPER TO SEE IF THERE IS AN IMPERMEABLE LAYER OF SOIL RESTRICTING WATER MOVEMENT, BREAK UP ANY IMPERMEABLE LAYER AND REPEAT THE TEST.

PLANTING DETAILS | SCALE:NTS | 1

EQUIPMENT LEGEND

- M — NEW WATER METER AND SERVICE LINE (VERIFY SIZES AND FUNCTION IN THE FIELD)
- FEBCO MODEL 715 BRASS PRESSURE TYPE BACKFLOW PREVENTER, 12" ABOVE HIGHEST OUTLET. USE NEW BACKFLOW ONLY IF EXISTING SYSTEM HAS NONE OR IS INOPERABLE
- NIBCO T-113/T1580A GATE/BALL VALVE (LINE SIZE)
- Y — WILKENS YSBR WYE STRAINER (LINE SIZE) (30 MESH OR GREATER)
- P — WILKENS #500 PRESSURE REGULATOR (LINE SIZE). INSTALL ONLY IF EXISTING STATIC PRESSURE IS GREATER THAN 80 P.S.I.
- RAIN BIRD EFB-CP SERIES REMOTE CONTROL VALVE-INSTALL IN SHRUB BEDS WHEREVER POSSIBLE IN RECTANGULAR VALVE BOX AT RIGHT ANGLES TO HARDSCAPE
- C R — RAINBIRD ESP-SMT CONTROLLER (4 STATION) IN OUTDOOR LOCKING WALL MOUNT BOX INSTALL INCLUDED "WEATHER STATION" ON FASCIA BOARD OR CONTROLLER BOX/PEDESTAL, SENSOR TO HAVE CLEAR VIEW OF SKY
- PVC WATER PIPE CL. 200 3/4"- 1 1/2" (LATERALS)
- W — PVC PIPE/SLEEVE SCH. 40 - 2" MIN. OR2X DIA. OF PIPE OR WIRE BUNDLE. INSTALL UNDER ALL STREET OR DRIVE CROSSINGS

SPRINKLER HEADS

SYMBOL	DESCRIPTION	DISCHARGE - GPM Q	T	H	TT	TQ	PSI F	RADIUS	PRECIP RATE
	5 SERIES STREAM BUBBLER SPRINKLER								
	RAIN BIRD #1806-5H-B 6" POP-UP SPRAY ROOT WATERING SYSTEM		1.0				30	5 FT.	1.83 IN/HR G
	RAIN BIRD RWS-1404					1.0	30	---	

AN II - DRAIN CHECK VALVES (ADV) SHALL BE INSTALLED AT ANY WATER OUTLET SUFFERING LOW HEAD DRAINAGE-USE RAIN BIRD SAM'S FOR POP-UPS - USE HUNGER HCV 50M-50F OR VALCON V5000 SERIES AT RISERS.

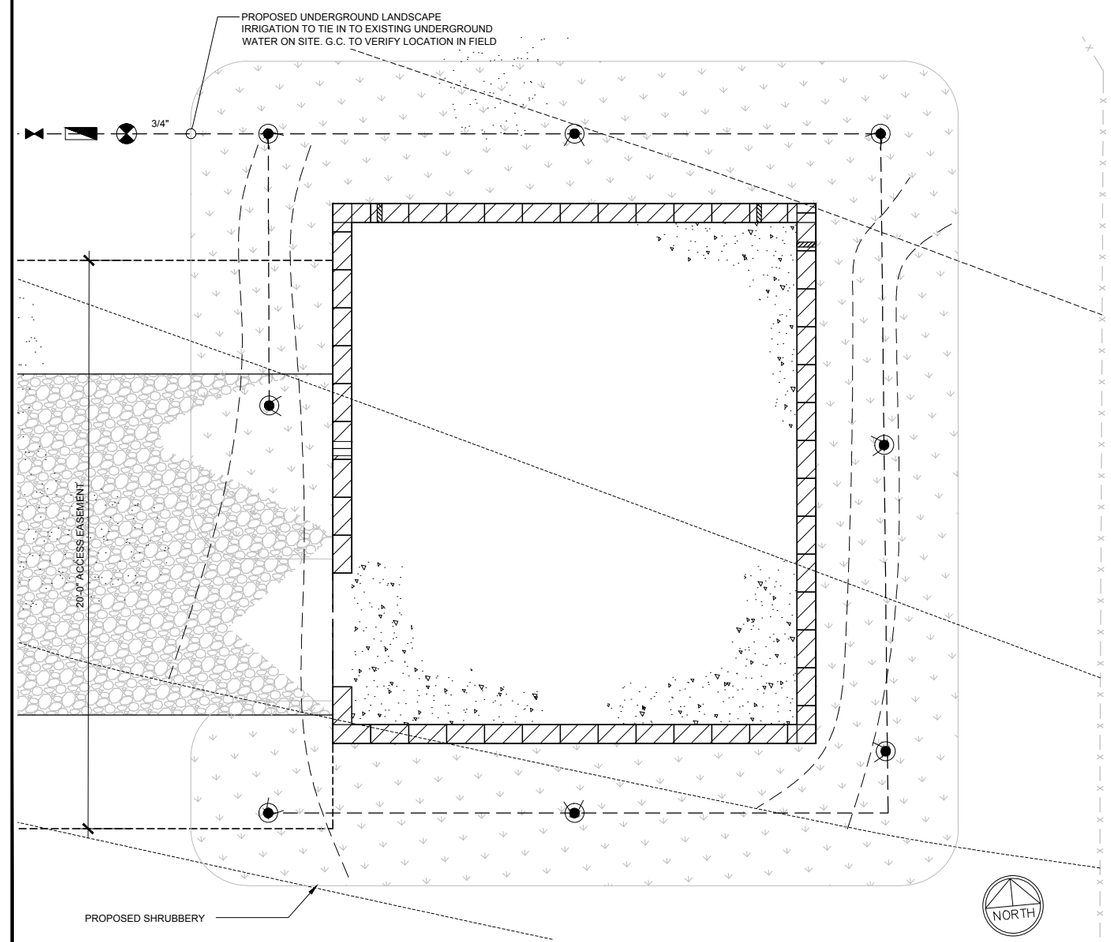

LANDSCAPING AND IRRIGATION PLAN | SCALE: 3/8"=1'-0" | 2

ISSUE STATUS

REV.	DATE	DESCRIPTION	BY
1	08/03/15	90% CONSTRUCTION	CDL
2	09/04/15	90% REVISIONS	CDL
3	09/22/15	100% CONSTRUCTION	CDL
4	10/12/15	REVISED 100% CD	JNC
5	03/23/16	REVISED 100% CD	CLG
6	05/03/16	REVISED 100% CD	MMR

W-T COMMUNICATION DESIGN GROUP, LLC.
WIRELESS INFRASTRUCTURE
8560 S. Eastern Ave. Suite 220
Las Vegas, NV 89123
PH: (702) 998-1000 FAX: (702) 998-1010
www.wtengineering.com

COPYRIGHT © 2016 W-T COMMUNICATION DESIGN GROUP, LLC.
PROJECT #: T1600022

PROPRIETARY INFORMATION

THE INFORMATION CONTAINED IN THIS SET OF DRAWINGS IS PROPRIETARY & CONFIDENTIAL TO VERIZON WIRELESS

ANY USE OR DISCLOSURE OTHER THAN AS IT RELATES TO VERIZON WIRELESS IS STRICTLY PROHIBITED

verizon
15505 SAND CANYON AVENUE, D1
IRVINE, CA 92618

JEFFERY S. GUTOWSKY, PE, SE
LICENSED STRUCTURAL ENGINEER
STATE OF CALIFORNIA
LICENSE # S5743
EXPIRES: 12/31/16 SIGNED:____

GRAPEWIN
8306 GRAPEWIN STREET
EASTVALE, CA 92880

SHEET TITLE:
LANDSCAPING PLAN & DETAILS

L-1

NOTE: THE ORIGINAL SIZE OF THIS PLAN IS 30" X 24". 11"x17" PLOT WILL BE HALF SCALE UNLESS OTHERWISE NOTED

GRAPEWIN 100%CD_rev6_5.3.16.dwg

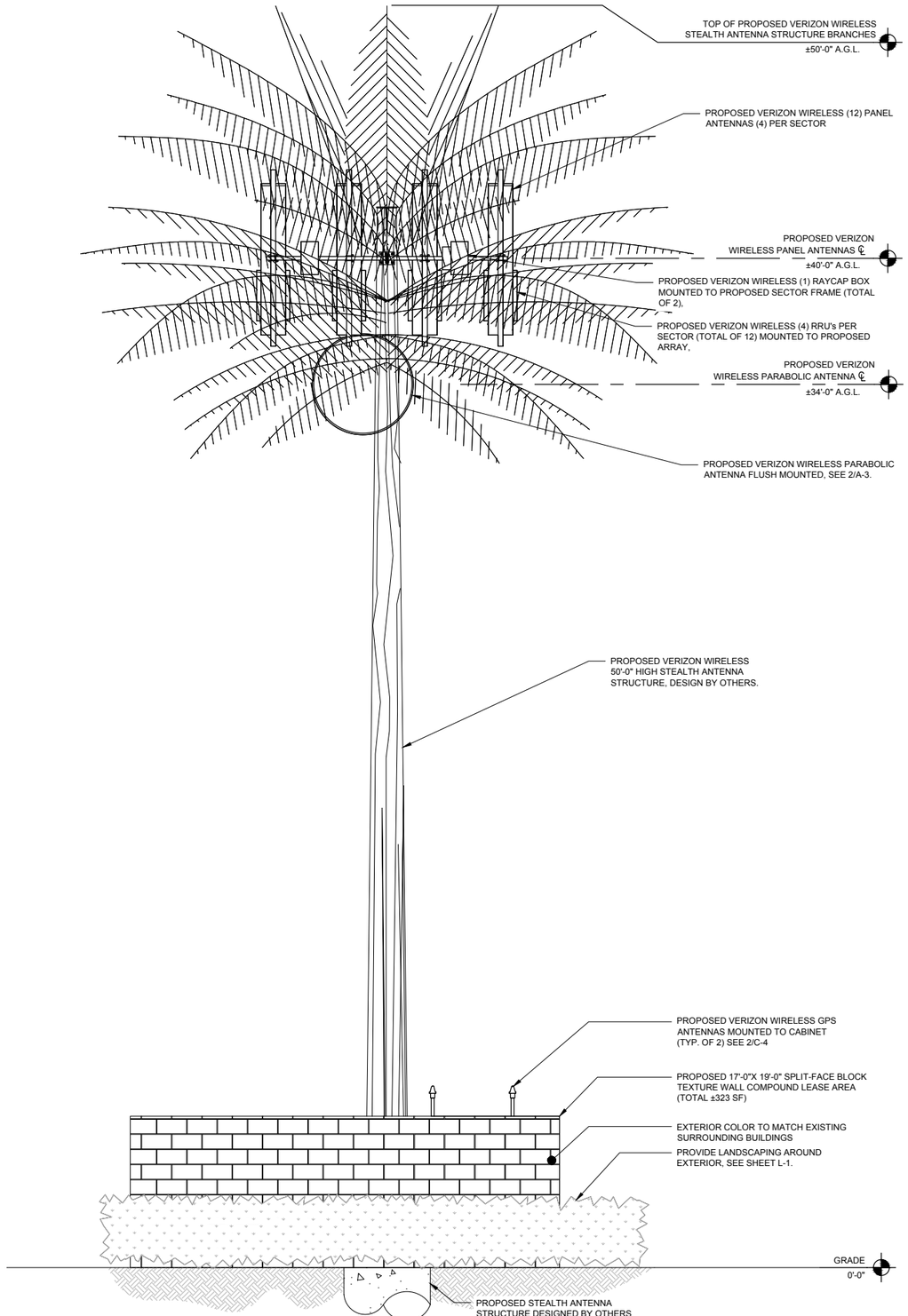

PROPOSED NORTH ELEVATION | SCALE: 1/4"=1'-0" | 1

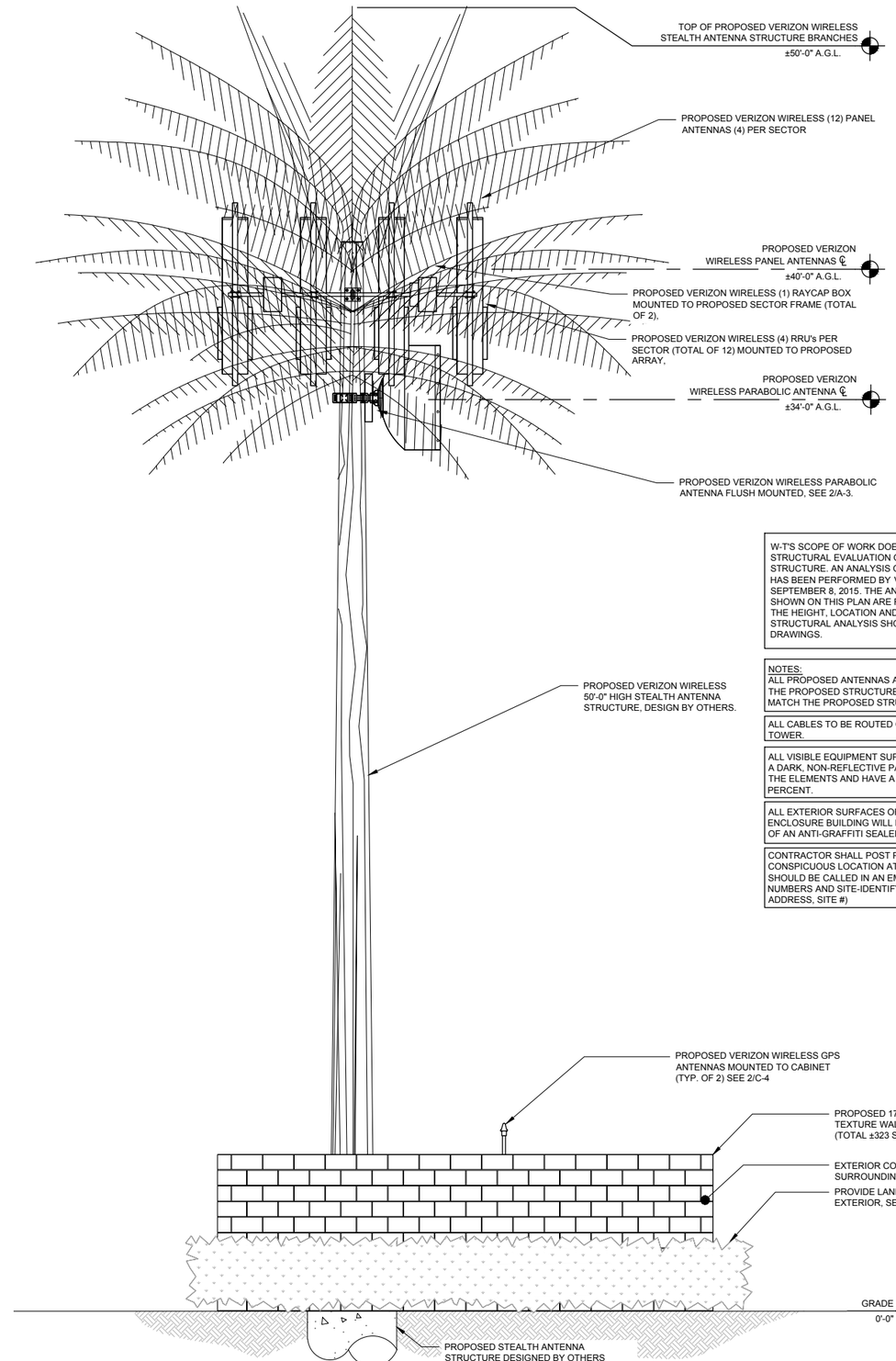

PROPOSED EAST ELEVATION | SCALE: 1/4"=1'-0" | 2

W-T'S SCOPE OF WORK DOES NOT INCLUDE A STRUCTURAL EVALUATION OF THIS TOWER OR STRUCTURE. AN ANALYSIS OF THE TOWER OR STRUCTURE HAS BEEN PERFORMED BY VECTOR ENGINEERS DATED SEPTEMBER 8, 2015. THE ANTENNAS AND EQUIPMENT SHOWN ON THIS PLAN ARE FOR REFERENCE ONLY AND THE HEIGHT, LOCATION AND MOUNTING SHOWN IN THE STRUCTURAL ANALYSIS SHOULD SUPERSEDE THESE DRAWINGS.

NOTES:
ALL PROPOSED ANTENNAS AND EQUIPMENT MOUNTED TO THE PROPOSED STRUCTURE SHALL BE PAINTED TO MATCH THE PROPOSED STRUCTURE.

ALL CABLES TO BE ROUTED ON THE INTERIOR OF STEALTH TOWER.

ALL VISIBLE EQUIPMENT SUPPORTS SHALL BE PAINTED IN A DARK, NON-REFLECTIVE PAINT COLOR SUITABLE FOR THE ELEMENTS AND HAVE A REFLECTIVE RATING OF 38 PERCENT.

ALL EXTERIOR SURFACES OF PROPOSED EQUIPMENT ENCLOSURE BUILDING WILL BE TREATED WITH 2-COATS OF AN ANTI-GRAFFITI SEALER (CLEAR/MATTE FINISH).

CONTRACTOR SHALL POST PERMANENT SIGNAGE IN CONSPICUOUS LOCATION AT THE SITE IDENTIFYING WHOM SHOULD BE CALLED IN AN EMERGENCY, WITH PHONE NUMBERS AND SITE-IDENTIFYING INFORMATION (SUCH AS ADDRESS, SITE #)

ISSUE STATUS

REV.	DATE	DESCRIPTION	BY
1	08/03/15	90% CONSTRUCTION	CDL
2	09/04/15	90% REVISIONS	CDL
3	09/22/15	100% CONSTRUCTION	CDL
4	10/12/15	REVISED 100% CD	JNC
5	03/23/16	REVISED 100% CD	CLG
6	05/03/16	REVISED 100% CD	MMR

W-T COMMUNICATION DESIGN GROUP, LLC.
WIRELESS INFRASTRUCTURE
8560 S. Eastern Ave. Suite 220
Las Vegas, NV 89123
PH: (702) 998-1000 FAX: (702) 998-1010
www.wtengineering.com
COPYRIGHT © 2016 W-T COMMUNICATION DESIGN GROUP, LLC.
PROJECT #: T1600022

PROPRIETARY INFORMATION
THE INFORMATION CONTAINED IN THIS SET OF DRAWINGS IS PROPRIETARY & CONFIDENTIAL TO VERIZON WIRELESS

ANY USE OR DISCLOSURE OTHER THAN AS IT RELATES TO VERIZON WIRELESS IS STRICTLY PROHIBITED

verizon
15505 SAND CANYON AVENUE, D1
IRVINE, CA 92618

JEFFERY S. GUTOWSKY, PE, SE
LICENSED STRUCTURAL ENGINEER
STATE OF CALIFORNIA
LICENSE # S5743
EXPIRES: 12/31/16 SIGNED:____

GRAPEWIN
8306 GRAPEWIN STREET
EASTVALE, CA 92880

SHEET TITLE:
PROPOSED ELEVATIONS

A-1

NOTE: THE ORIGINAL SIZE OF THIS PLAN IS 36" X 24", 11"x17" PLOT WILL BE HALF SCALE UNLESS OTHERWISE NOTED

GRAPEWIN 100%CD_rev6_5.3.16.dwg

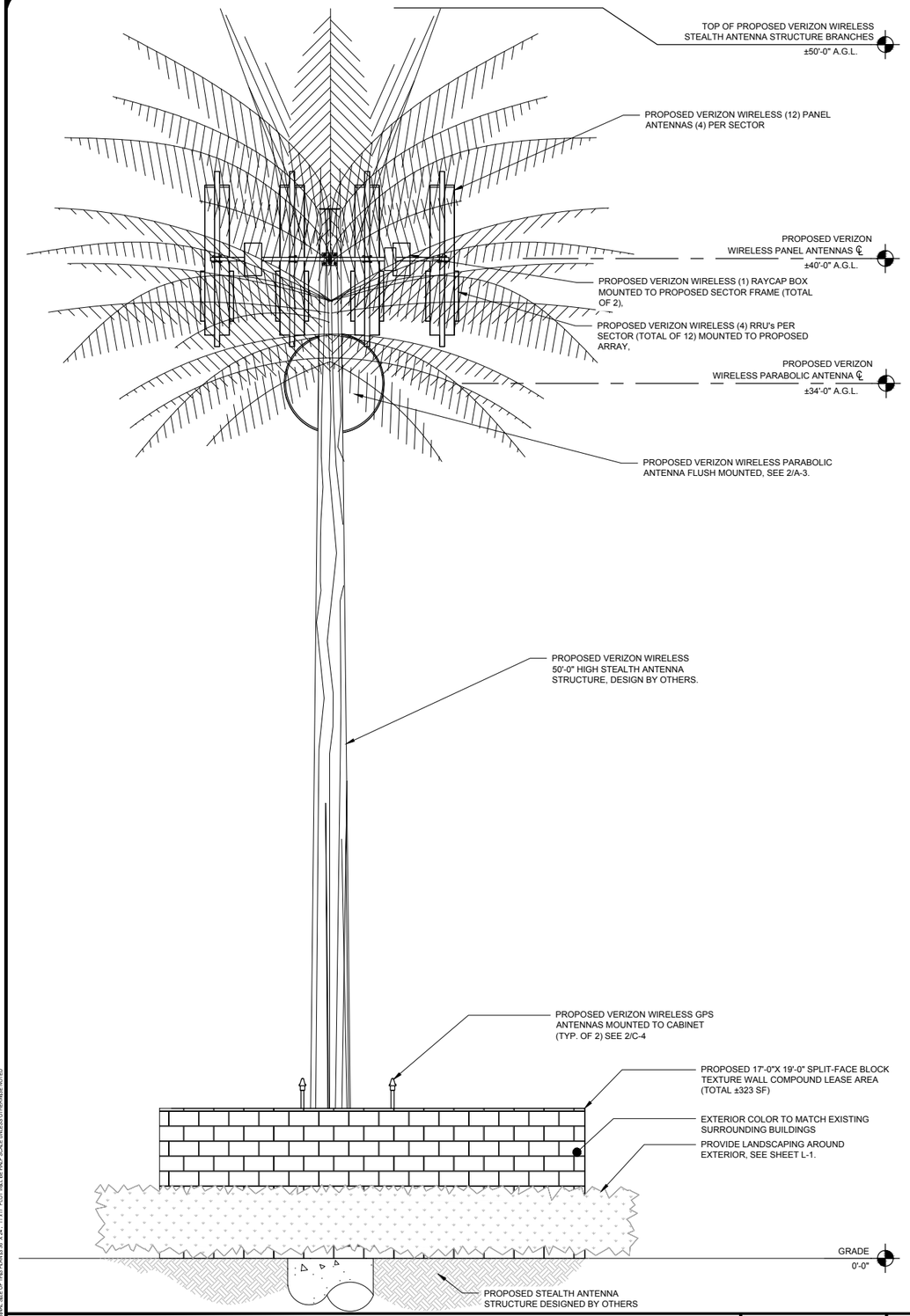

PROPOSED SOUTH ELEVATION | SCALE: 3/8"=1'-0" | 1

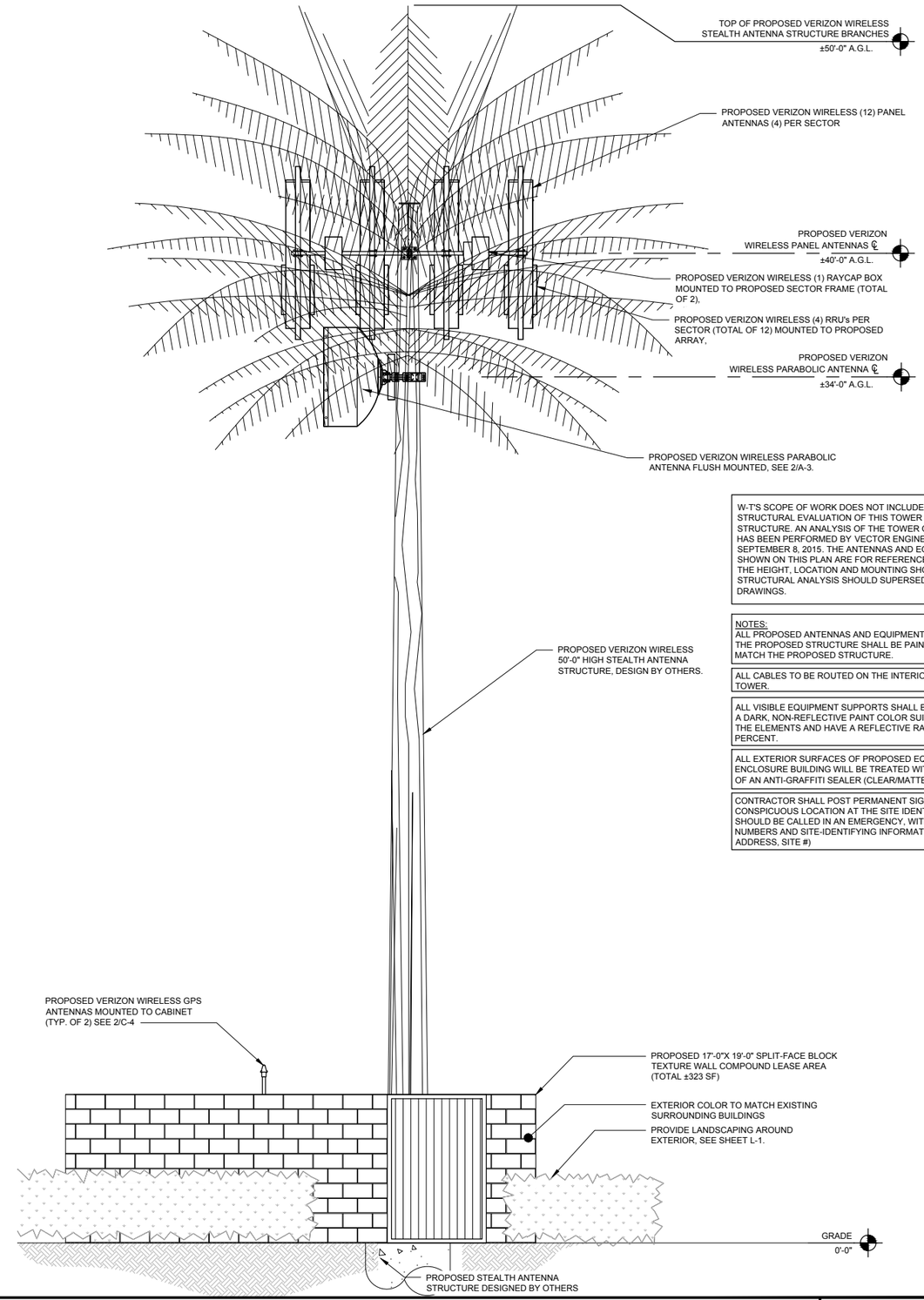

PROPOSED WEST ELEVATION | SCALE: 3/8"=1'-0" | 2

W-T'S SCOPE OF WORK DOES NOT INCLUDE A STRUCTURAL EVALUATION OF THIS TOWER OR STRUCTURE. AN ANALYSIS OF THE TOWER OR STRUCTURE HAS BEEN PERFORMED BY VECTOR ENGINEERS DATED SEPTEMBER 8, 2015. THE ANTENNAS AND EQUIPMENT SHOWN ON THIS PLAN ARE FOR REFERENCE ONLY AND THE HEIGHT, LOCATION AND MOUNTING SHOWN IN THE STRUCTURAL ANALYSIS SHOULD SUPERSEDE THESE DRAWINGS.

NOTES:
ALL PROPOSED ANTENNAS AND EQUIPMENT MOUNTED TO THE PROPOSED STRUCTURE SHALL BE PAINTED TO MATCH THE PROPOSED STRUCTURE.

ALL CABLES TO BE ROUTED ON THE INTERIOR OF STEALTH TOWER.

ALL VISIBLE EQUIPMENT SUPPORTS SHALL BE PAINTED IN A DARK, NON-REFLECTIVE PAINT COLOR SUITABLE FOR THE ELEMENTS AND HAVE A REFLECTIVE RATING OF 38 PERCENT.

ALL EXTERIOR SURFACES OF PROPOSED EQUIPMENT ENCLOSURE BUILDING WILL BE TREATED WITH 2-COATS OF AN ANTI-GRAFFITI SEALER (CLEAR/MATTE FINISH).

CONTRACTOR SHALL POST PERMANENT SIGNAGE IN CONSPICUOUS LOCATION AT THE SITE IDENTIFYING WHOM SHOULD BE CALLED IN AN EMERGENCY, WITH PHONE NUMBERS AND SITE-IDENTIFYING INFORMATION (SUCH AS ADDRESS, SITE #)

ISSUE STATUS

REV.	DATE	DESCRIPTION	BY
1	08/03/15	90% CONSTRUCTION	CDL
2	09/04/15	90% REVISIONS	CDL
3	09/22/15	100% CONSTRUCTION	CDL
4	10/12/15	REVISED 100% CD	JNC
5	03/23/16	REVISED 100% CD	CLG
6	05/03/16	REVISED 100% CD	MMR

W-T COMMUNICATION DESIGN GROUP, LLC.
WIRELESS INFRASTRUCTURE
8560 S. Eastern Ave. Suite 220
Las Vegas, NV 89123
PH: (702) 998-1000 FAX: (702) 998-1010
www.wtengineering.com
COPYRIGHT © 2016 W-T COMMUNICATION DESIGN GROUP, LLC.
PROJECT #: T1600022

PROPRIETARY INFORMATION

THE INFORMATION CONTAINED IN THIS SET OF DRAWINGS IS PROPRIETARY & CONFIDENTIAL TO VERIZON WIRELESS

ANY USE OR DISCLOSURE OTHER THAN AS IT RELATES TO VERIZON WIRELESS IS STRICTLY PROHIBITED

verizon
15505 SAND CANYON AVENUE, D1
IRVINE, CA 92618

JEFFERY S. GUTOWSKY, PE, SE
LICENSED STRUCTURAL ENGINEER
STATE OF CALIFORNIA
LICENSE # S5743
EXPIRES: 12/31/16 SIGNED:____

GRAPEWIN
8306 GRAPEWIN STREET
EASTVALE, CA 92880

SHEET TITLE:
PROPOSED ELEVATIONS

A-2

NOTE: THE ORIGINAL SIZE OF THIS PLAN IS 30" X 24". 11"x17" PLOT WILL BE HALF SCALE UNLESS OTHERWISE NOTED

GRAPEWIN 100%CD_rev6_5.3.16.dwg

NOT USED | SCALE: N.T.S. | 1

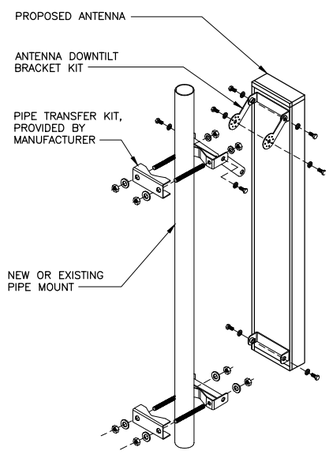

ANTENNA MOUNT | SCALE: N.T.S. | 2

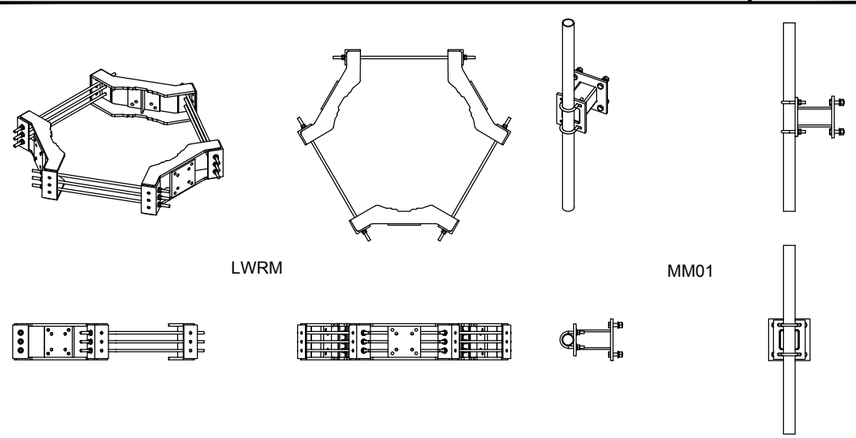

PARABOLIC ANTENNA VALMONT LWRM
UNIVERSAL RING MOUNT & MM01 STAND-OFF MOUNT | SCALE: N.T.S. | 3

NOTE
ALL CABLES TO BE ROUTED ON THE INTERIOR OF STEALTH ANTENNA STRUCTURE.

NOTE:
STEALTH ANTENNA STRUCTURE BRANCHES NOT SHOWN FOR CLARITY

NOTE:
W-T'S SCOPE OF WORK DOES NOT INCLUDE A STRUCTURAL EVALUATION OF THIS TOWER OR STRUCTURE. AN ANALYSIS OF THE TOWER OR STRUCTURE HAS BEEN PERFORMED BY VECTOR ENGINEERS DATED SEPTEMBER 8, 2015 THE ANTENNAS AND EQUIPMENT SHOWN ON THIS PLAN ARE FOR REFERENCE ONLY AND THE HEIGHT, LOCATION AND MOUNTING SHOWN IN THE STRUCTURAL ANALYSIS SHALL SUPERSEDE THESE DRAWINGS.

NOTE
- ALL ANCILLARY EQUIPMENT AND HARDWARE ATTACHED TO THE STEALTH ANTENNA STRUCTURE SHALL BE PAINTED TO MATCH THE STEALTH ANTENNA STRUCTURE.
- ALL ANTENNAS, MICROWAVE DISH, RRU's, DC SURGE SUPPRESSORS AND EQUIPMENT SHALL BE ENTIRELY SCREENED FROM VIEW BY UTILIZING ALL THREE METHODS OF ARTIFICIAL BRANCHES, ANTENNA TIPS, ANTENNA BRANCHES, PINE NEEDLE SOCKS, TOP BRANCH, AND FOLIAGE OF THE STEALTH ANTENNA STRUCTURE.

NOTE
ALL CABLES TO BE ROUTED ON THE INTERIOR OF STEALTH ANTENNA STRUCTURE.

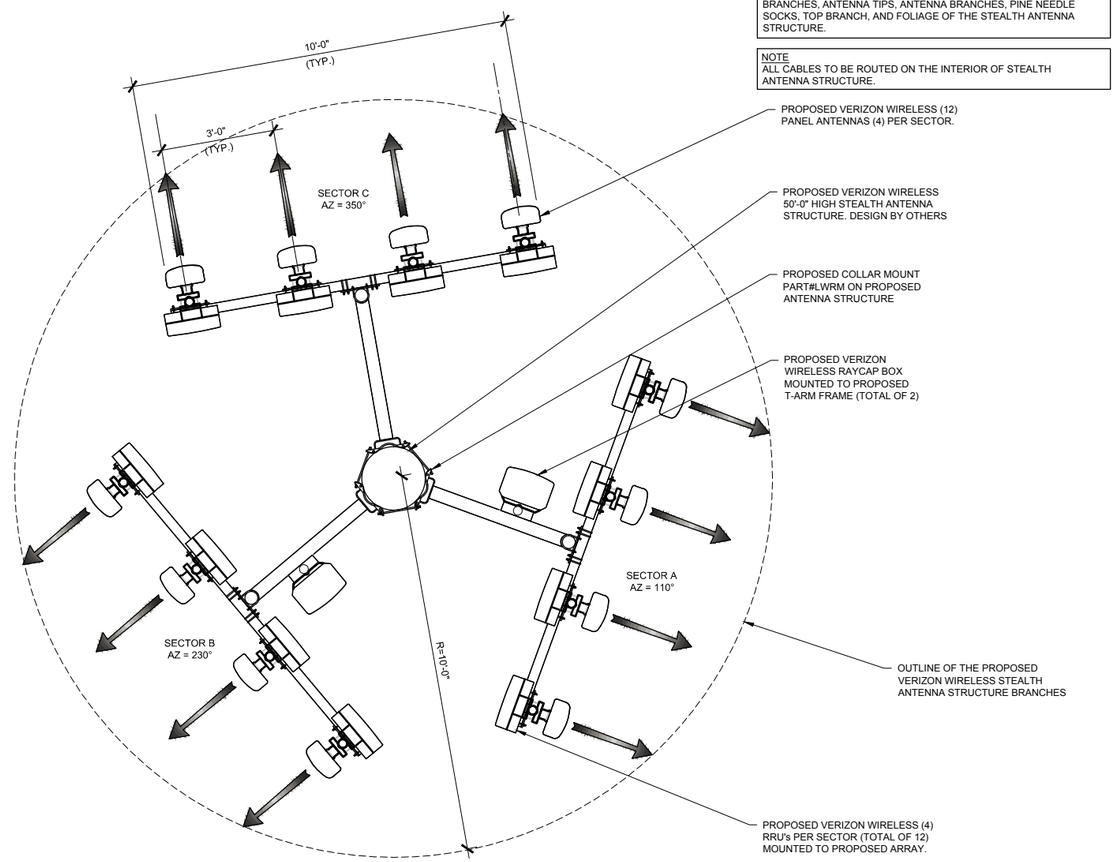

ENLARGED ANTENNA ARRAY PLAN

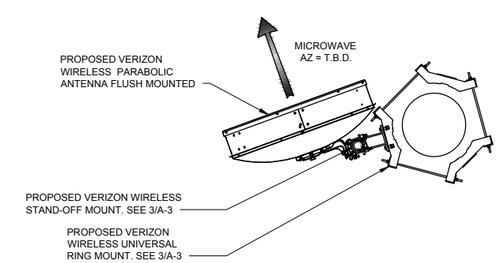

ENLARGED PARABOLIC ANTENNA PLAN

CABLE/ANTENNA SCHEDULE

ANTENNA SECTOR	AZIMUTH	# OF ANT	# OF RRU's	CENTER LINE	CABLE SIZE
ALPHA	110°	4	4	57'-0"	1.70"
BETA	230°	4	4	57'-0"	1.70"
GAMMA	350°	4	4	57'-0"	1.70"
PARABOLIC	TBD	1		50'-6"	TBD
GPS	N/A	1			TBD

NOTE: CONSTRUCTION MANAGER TO FIELD VERIFY CABLE LENGTHS PRIOR TO OPENING, FABRICATION, OR INSTALLATION OF CABLES CHECK RF DATA SHEET.

NORTH

ENLARGED ANTENNA PLAN & HYBRID/ANTENNA SCHEDULE | SCALE: ############ | 4

ISSUE STATUS

REV.	DATE	DESCRIPTION	BY
1	08/03/15	90% CONSTRUCTION	CDL
2	09/04/15	90% REVISIONS	CDL
3	09/22/15	100% CONSTRUCTION	CDL
4	10/12/15	REVISED 100% CD	JNC
5	03/23/16	REVISED 100% CD	CLG
6	05/03/16	REVISED 100% CD	MMR

W-T COMMUNICATION DESIGN GROUP, LLC.
WIRELESS INFRASTRUCTURE
8560 S. Eastern Ave. Suite 220
Las Vegas, NV 89123
PH: (702) 998-1000 FAX: (702) 998-1010
www.wtengineering.com
COPYRIGHT © 2016 W-T COMMUNICATION DESIGN GROUP, LLC.
PROJECT #: T1600022

PROPRIETARY INFORMATION
THE INFORMATION CONTAINED IN THIS SET OF DRAWINGS IS PROPRIETARY & CONFIDENTIAL TO VERIZON WIRELESS

ANY USE OR DISCLOSURE OTHER THAN AS IT RELATES TO VERIZON WIRELESS IS STRICTLY PROHIBITED

verizon
15505 SAND CANYON AVENUE, D1
IRVINE, CA 92618

JEFFERY S. GUTOWSKY, PE, SE
LICENSED STRUCTURAL ENGINEER
STATE OF CALIFORNIA
LICENSE # S5743
EXPIRES: 12/31/16 SIGNED:____

GRAPEWIN
8306 GRAPEWIN STREET
EASTVALE, CA 92880

SHEET TITLE:
ENLARGED ANTENNA PLAN & DETAILS

A-3

NOTE: THE ORIGINAL SIZE OF THIS PLAN IS 30" X 24", 11"x17" PLOT WILL BE HALF SCALE UNLESS OTHERWISE NOTED

GRAPEWIN 100%CD_rev6_5.3.16.dwg

FROM EXISTING PULLBOX TO METER PEDESTAL			
LENGTH OF RUN	WIRE SIZE	VOLTAGE DROP (VOLTS)	PERCENTAGE OF VOLTAGE
25'	(2) 1/0 AWG	0.62V	0.26%
FROM METER TO CABINET			
LENGTH OF RUN	WIRE SIZE	VOLTAGE DROP (VOLTS)	PERCENTAGE OF VOLTAGE
400'	(3) 1/0 AWG	4.67V	1.94%

NOTE:
CONTRACTOR TO INSTALL A 17"x30" PULL BOX FOR POWER & TELCO AFTER EVERY 300' OR AFTER EVERY TWO 90° BENDS

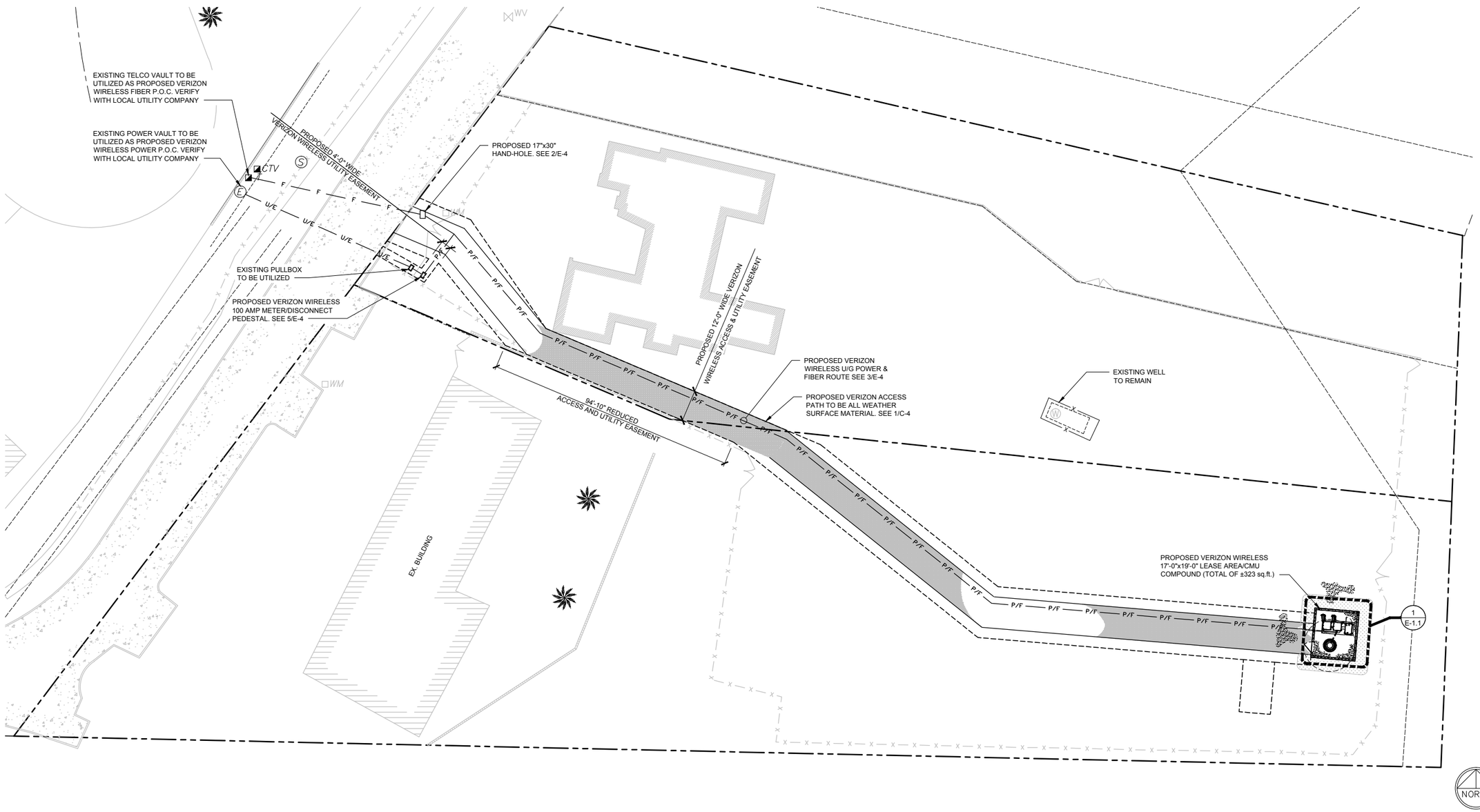

OVERALL UTILITY PLAN

SCALE: 1/20" = 1'-0"

1

ISSUE STATUS

REV.	DATE	DESCRIPTION	BY
1	08/03/15	90% CONSTRUCTION	CDL
2	09/04/15	90% REVISIONS	CDL
3	09/22/15	100% CONSTRUCTION	CDL
4	10/12/15	REVISED 100% CD	JNC
5	03/23/16	REVISED 100% CD	CLG
6	05/03/16	REVISED 100% CD	MMR

W-T COMMUNICATION DESIGN GROUP, LLC.
WIRELESS INFRASTRUCTURE
8560 S. Eastern Ave. Suite 220
Las Vegas, NV 89123
PH: (702) 998-1000 FAX: (702) 998-1010
www.wtengineering.com

COPYRIGHT © 2016 W-T COMMUNICATION DESIGN GROUP, LLC.

PROJECT #: T1600022

PROPRIETARY INFORMATION

THE INFORMATION CONTAINED IN THIS SET OF DRAWINGS IS PROPRIETARY & CONFIDENTIAL TO VERIZON WIRELESS

ANY USE OR DISCLOSURE OTHER THAN AS IT RELATES TO VERIZON WIRELESS IS STRICTLY PROHIBITED

verizon

15505 SAND CANYON AVENUE, D1
IRVINE, CA 92618

GRAPEWIN
8306 GRAPEWIN STREET
EASTVALE, CA 92880

SHEET TITLE:
OVERALL UTILITY PLAN

E-1

NOTE: THE ORIGINAL SIZE OF THIS PLAN IS 30" X 24". 11"x17" PLOT WILL BE HALF SCALE UNLESS OTHERWISE NOTED

GRAPEWIN 100%CD_rev6_5.3.16.dwg

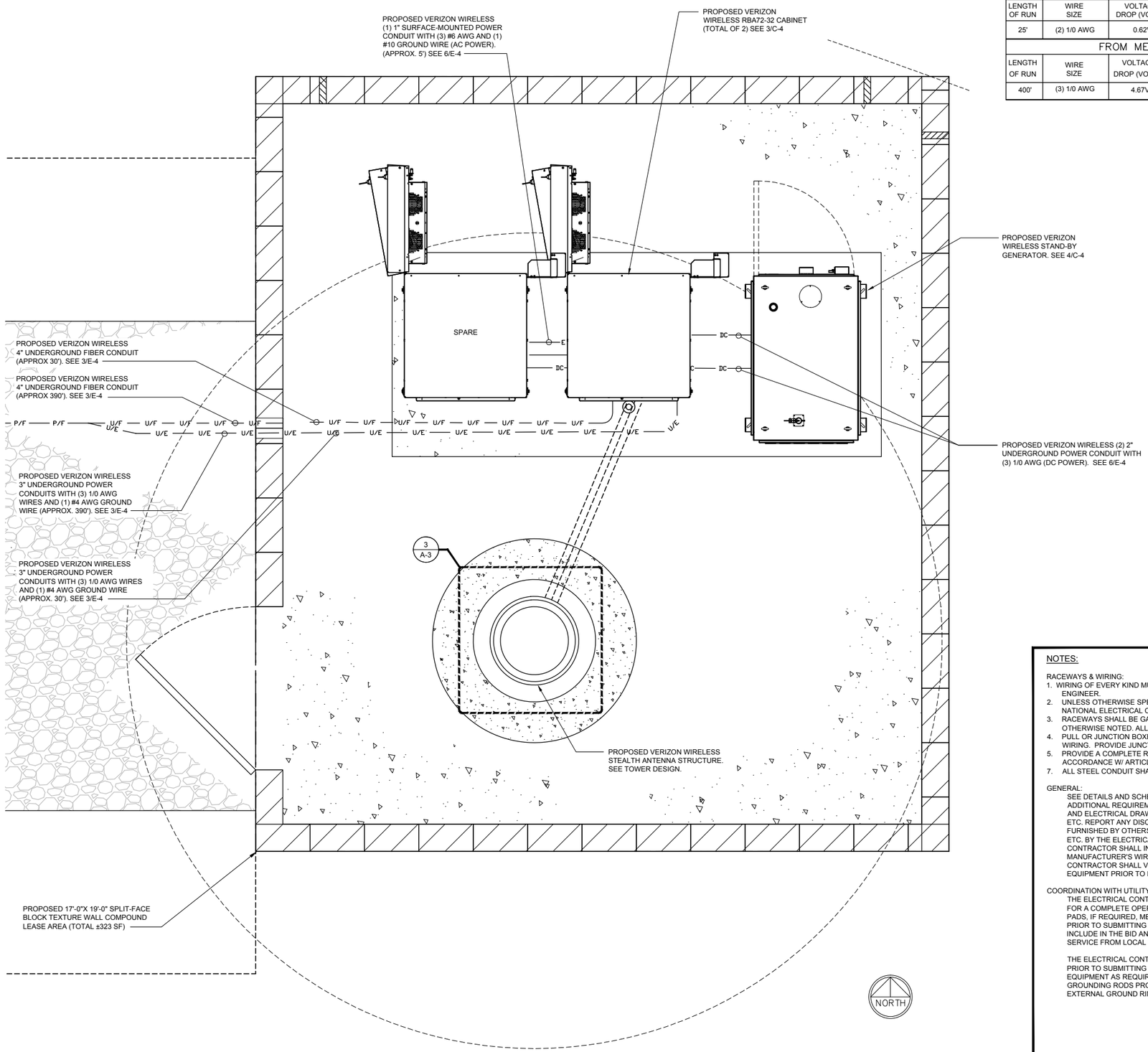

FROM EXISTING PULLBOX TO METER PEDESTAL			
LENGTH OF RUN	WIRE SIZE	VOLTAGE DROP (VOLTS)	PERCENTAGE OF VOLTAGE
25'	(2) 1/0 AWG	0.62V	0.26%
FROM METER TO CABINET			
LENGTH OF RUN	WIRE SIZE	VOLTAGE DROP (VOLTS)	PERCENTAGE OF VOLTAGE
400'	(3) 1/0 AWG	4.67V	1.94%

NOTE:
CONTRACTOR TO INSTALL A 17"x30" PULL BOX FOR POWER & TELCO AFTER EVERY 300' OR AFTER EVERY TWO 90° BENDS

NOTES:

RACEWAYS & WIRING:
1. WIRING OF EVERY KIND MUST BE INSTALLED IN CONDUIT, UNLESS NOTED OTHERWISE, OR AS APPROVED BY THE ENGINEER.
2. UNLESS OTHERWISE SPECIFIED, ALL WIRING SHALL BE COPPER (CU) TYPE THWN, SIZED IN ACCORDANCE W/ THE NATIONAL ELECTRICAL CODE.
3. RACEWAYS SHALL BE GALVANIZED STEEL, SIZED IN ACCORDANCE W/ THE NATIONAL ELECTRICAL CODE, UNLESS OTHERWISE NOTED. ALL RACEWAYS SHALL BE APPROVED FOR THE INSTALLATION.
4. PULL OR JUNCTION BOXES SHALL BE PROVIDED AS REQUIRED TO FACILITATE INSTALLATION OF RACEWAYS AND WIRING. PROVIDE JUNCTION BOX AND PULL BOXES FOR CONDUIT RUNS W/ MORE THAN (360) DEGREES OF BENDS.
5. PROVIDE A COMPLETE RACEWAY AND WIRING INSTALLATION, PERMANENTLY AND EFFECTIVELY GROUNDED IN ACCORDANCE W/ ARTICLE 250 OF THE NATIONAL ELECTRICAL CODE AND LOCAL CODES.
7. ALL STEEL CONDUIT SHALL BE BONDED AT BOTH ENDS WITH GROUNDING BUSHING.

GENERAL:
SEE DETAILS AND SCHEDULES ON DRAWINGS AND SPECIFICATIONS FOR MEANING OF ABBREVIATIONS AND ADDITIONAL REQUIREMENTS AND INFORMATION. CHECK ARCHITECTURAL, STRUCTURAL AND OTHER MECHANICAL AND ELECTRICAL DRAWINGS FOR SCALE, SPACE LIMITATIONS, COORDINATION, AND ADDITIONAL INFORMATION, ETC. REPORT ANY DISCREPANCIES, CONFLICTS, ETC. TO ENGINEER BEFORE SUBMITTING BID. ALL EQUIPMENT FURNISHED BY OTHERS (FBO) SHALL BE PROVIDED W/ PROPER MOTOR STARTERS, DISCONNECTS, CONTROLS, ETC. BY THE ELECTRICAL CONTRACTOR UNLESS SPECIFICALLY NOTED OTHERWISE. THE ELECTRICAL CONTRACTOR SHALL INSTALL AND COMPLETELY WIRE ALL ASSOCIATED EQUIPMENT IN ACCORDANCE W/ MANUFACTURER'S WIRE DIAGRAMS AND AS REQUIRED FOR A COMPLETE OPERATING INSTALLATION. ELECTRICAL CONTRACTOR SHALL VERIFY AND COORDINATE ELECTRICAL CHARACTERISTICS AND REQUIREMENTS OF (FBO) EQUIPMENT PRIOR TO ROUGH-IN OF CONDUIT AND WIRING TO AVOID CONFLICTS.

COORDINATION WITH UTILITY COMPANY:
THE ELECTRICAL CONTRACTOR SHALL COORDINATE COMPLETE ELECTRICAL SERVICE W/ LOCAL UTILITY COMPANY FOR A COMPLETE OPERATIONS SYSTEM, INCLUDING TRANSFORMER CONNECTIONS, CONCRETE TRANSFORMER PADS, IF REQUIRED, METER SOCKETS, PRIMARY CABLE RACEWAY REQUIREMENTS, SECONDARY SERVICE, ETC. PRIOR TO SUBMITTING BID TO INCLUDE ALL LABOR AND MATERIALS. THE ELECTRICAL CONTRACTOR SHALL INCLUDE IN THE BID ANY OPTIONAL OR EXCESS FACILITY CHARGES ASSOCIATED W/ PROVIDING ELECTRICAL SERVICE FROM LOCAL UTILITY COMPANY. VERIFY BEFORE BIDDING TO INCLUDE ALL COSTS.

THE ELECTRICAL CONTRACTOR SHALL VERIFY THE AVAILABLE FAULT CURRENT W/ THE LOCAL UTILITY COMPANY PRIOR TO SUBMITTING BID. ADJUST A.I.C. RATINGS OF THE OVER CURRENT PROTECTION DEVICES IN DISTRIBUTION EQUIPMENT AS REQUIRED TO COORDINATE W/ AVAILABLE FAULT CURRENT FROM LOCAL UTILITY COMPANY. ALL GROUNDING RODS PROVIDED BY THE POWER OR TELEPHONE UTILITY COMPANIES MUST BE TIED INTO THE MAIN EXTERNAL GROUND RING.

OVERALL UTILITY PLAN | SCALE: 3/4" = 1'-0" | 1 | NOTES

ISSUE STATUS

REV.	DATE	DESCRIPTION	BY
1	08/03/15	90% CONSTRUCTION	CDL
2	09/04/15	90% REVISIONS	CDL
3	09/22/15	100% CONSTRUCTION	CDL
4	10/12/15	REVISED 100% CD	JNC
5	03/23/16	REVISED 100% CD	CLG
6	05/03/16	REVISED 100% CD	MMR

W-T
W-T COMMUNICATION DESIGN GROUP, LLC.
WIRELESS INFRASTRUCTURE
8560 S. Eastern Ave. Suite 220
Las Vegas, NV 89123
PH: (702) 998-1000 FAX: (702) 998-1010
www.wtengineering.com
COPYRIGHT © 2016 W-T COMMUNICATION DESIGN GROUP, LLC.
PROJECT #: T1600022

PROPRIETARY INFORMATION
THE INFORMATION CONTAINED IN THIS SET OF DRAWINGS IS PROPRIETARY & CONFIDENTIAL TO VERIZON WIRELESS
ANY USE OR DISCLOSURE OTHER THAN AS IT RELATES TO VERIZON WIRELESS IS STRICTLY PROHIBITED

verizon
15505 SAND CANYON AVENUE, D1
IRVINE, CA 92618

GRAPEWIN
8306 GRAPEWIN STREET
EASTVALE, CA 92880

SHEET TITLE:
ENLARGED UTILITY PLAN

E-1.1

NOTE: THE ORIGINAL SIZE OF THIS PLAN IS 30" X 24". 11"x17" PLOT WILL BE HALF SCALE UNLESS OTHERWISE NOTED

GRAPEWIN 100%CD_rev6_5.3.16.dwg

NOTE:
ALL ABOVE GROUND CONDUIT AND BENDS SHALL BE RIGID METAL CONDUIT. NO PVC CONDUIT SHALL BE ALLOWED ABOVE GROUND OR FOR ANY BENDS.

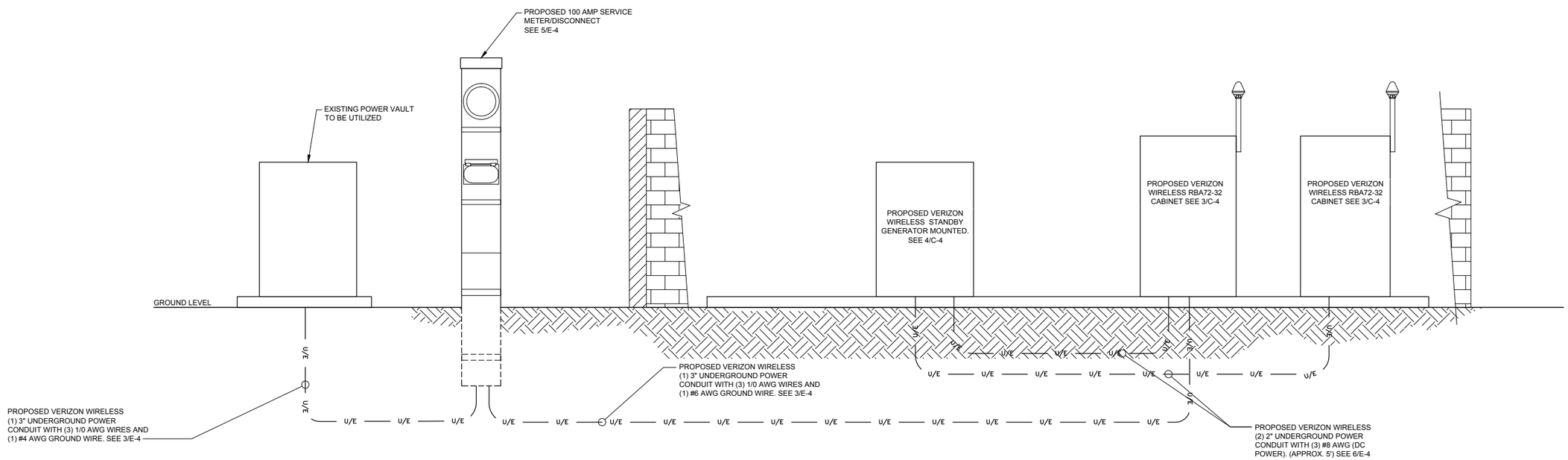

ELECTRICAL RISER DIAGRAM

SCALE: N.T.S.

1

NOTE:
ALL ABOVE GROUND CONDUIT AND BENDS SHALL BE RIGID METAL CONDUIT. NO PVC CONDUIT SHALL BE ALLOWED ABOVE GROUND OR FOR ANY BENDS.

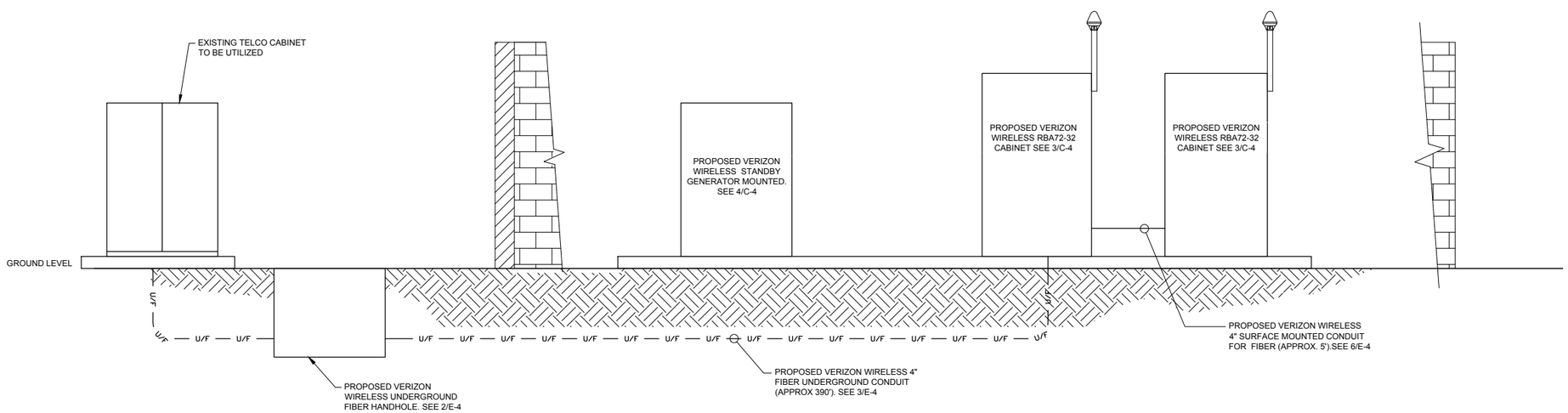

TELCO RISER DIAGRAM

SCALE: N.T.S.

2

ISSUE STATUS

REV.	DATE	DESCRIPTION	BY
1	08/03/15	90% CONSTRUCTION	CDL
2	09/04/15	90% REVISIONS	CDL
3	09/22/15	100% CONSTRUCTION	CDL
4	10/12/15	REVISED 100% CD	JNC
5	03/23/16	REVISED 100% CD	CLG
6	05/03/16	REVISED 100% CD	MMR

W-T COMMUNICATION DESIGN GROUP, LLC.
WIRELESS INFRASTRUCTURE
8560 S. Eastern Ave. Suite 220
Las Vegas, NV 89123
PH: (702) 998-1000 FAX: (702) 998-1010
www.wtengineering.com

COPYRIGHT © 2016 W-T COMMUNICATION DESIGN GROUP, LLC.

PROJECT #: T1600022

PROPRIETARY INFORMATION

THE INFORMATION CONTAINED IN THIS SET OF DRAWINGS IS PROPRIETARY & CONFIDENTIAL TO VERIZON WIRELESS

ANY USE OR DISCLOSURE OTHER THAN AS IT RELATES TO VERIZON WIRELESS IS STRICTLY PROHIBITED

verizon

15505 SAND CANYON AVENUE, D1
IRVINE, CA 92618

GRAPEWIN
8306 GRAPEWIN STREET
EASTVALE, CA 92880

SHEET TITLE:
ELECTRICAL & TELCO RISER DIAGRAMS

E-2

NOTE: THE ORIGINAL SIZE OF THIS PLAN IS 30" X 24". 11"x17" PLOT WILL BE HALF SCALE UNLESS OTHERWISE NOTED

GRAPEWIN 100%CD_rev6_5.3.16.dwg

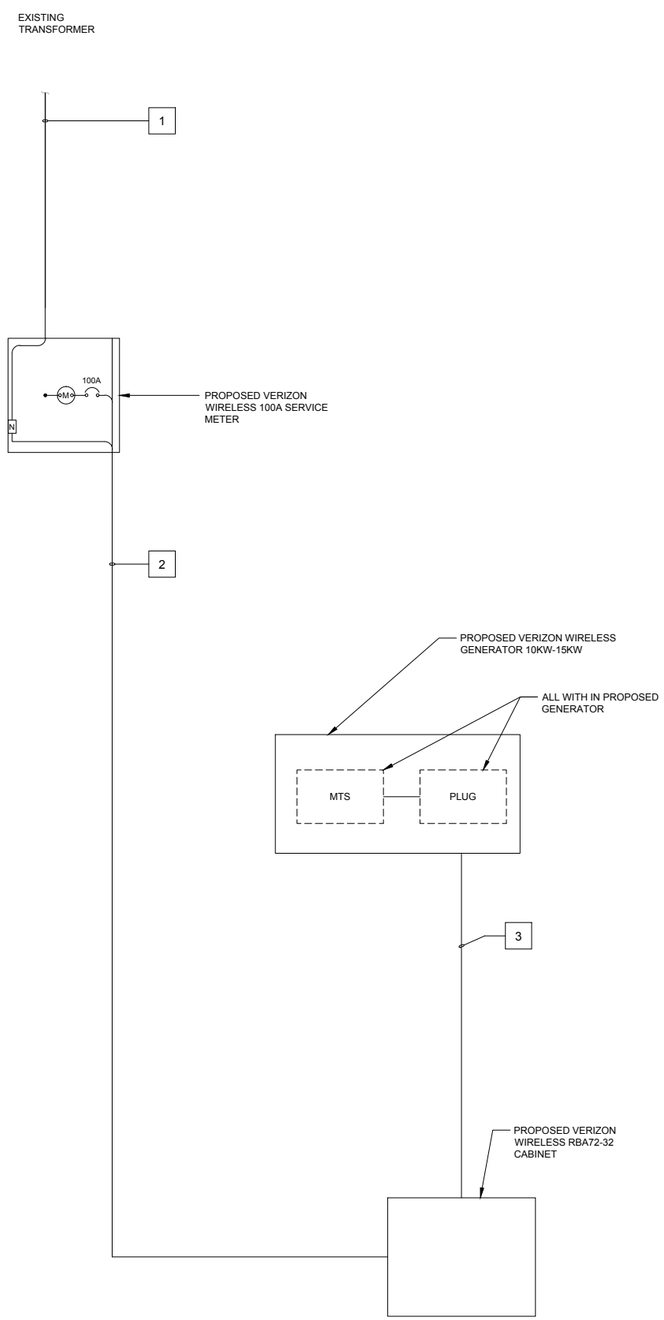

SINGLE-LINE DIAGRAM | SCALE: N.T.S. | 1

CIRCUIT SCHEDULE

NO	FROM	TO	CONFIGURATION	NOTES
1	EXISTING TRANSFORMER	PROPOSED VERIZON WIRELESS 100A METER PED	BY UTILITY	AC
2	PROPOSED VERIZON WIRELESS 100A METER PED	PROPOSED VERIZON WIRELESS CABINETS	(3) 2/0 AWG, (1) #6 AWG GND, (1) 3"C	AC
3	PROPOSED VERIZON WIRELESS CABINETS	PROPOSED VERIZON WIRELESS GENERATOR	(3) 4/0 AWG, (2) 2"C	DC

CIRCUIT SCHEDULE | SCALE: N.T.S. | 2

ISSUE STATUS

REV.	DATE	DESCRIPTION	BY
1	08/03/15	90% CONSTRUCTION	CDL
2	09/04/15	90% REVISIONS	CDL
3	09/22/15	100% CONSTRUCTION	CDL
4	10/12/15	REVISED 100% CD	JNC
5	03/23/16	REVISED 100% CD	CLG
6	05/03/16	REVISED 100% CD	MMR

W-T COMMUNICATION
DESIGN GROUP, LLC.
WIRELESS INFRASTRUCTURE
8560 S. Eastern Ave. Suite 220
Las Vegas, NV 89123
PH: (702) 998-1000 FAX: (702) 998-1010
www.wtengineering.com
COPYRIGHT © 2016 W-T COMMUNICATION DESIGN GROUP, LLC.
PROJECT #: T1600022

PROPRIETARY INFORMATION
THE INFORMATION CONTAINED IN THIS SET OF DRAWINGS IS PROPRIETARY & CONFIDENTIAL TO VERIZON WIRELESS
ANY USE OR DISCLOSURE OTHER THAN AS IT RELATES TO VERIZON WIRELESS IS STRICTLY PROHIBITED

verizon
15505 SAND CANYON AVENUE, D1
IRVINE, CA 92618

GRAPEWIN
8306 GRAPEWIN STREET
EASTVALE, CA 92880

SHEET TITLE:
SINGLE-LINE DIAGRAM
& CIRCUIT SCHEDULE

E-3

NOTE: THE ORIGINAL SIZE OF THIS PLAN IS 30" X 24". 11"x17" PLOT WILL BE HALF SCALE UNLESS OTHERWISE NOTED

GRAPEWIN 100%CD_rev6_5.3.16.dwg

NOT USED

SCALE: N.T.S.

1

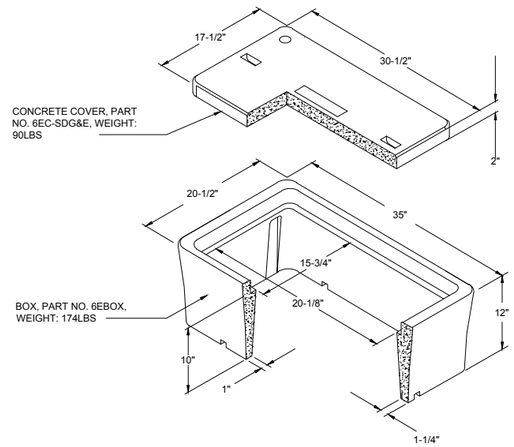

PULL BOX DETAIL

SCALE: N.T.S.

2

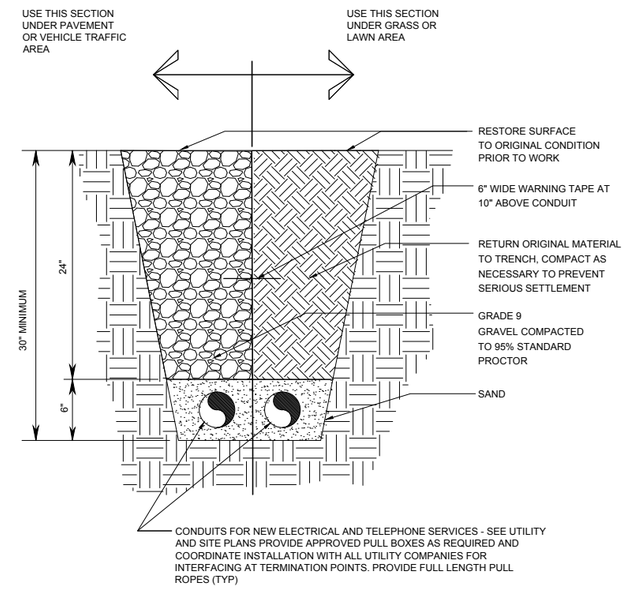

BURIED CONDUIT DETAIL

SCALE: N.T.S.

3

NOT USED

SCALE: N.T.S.

4

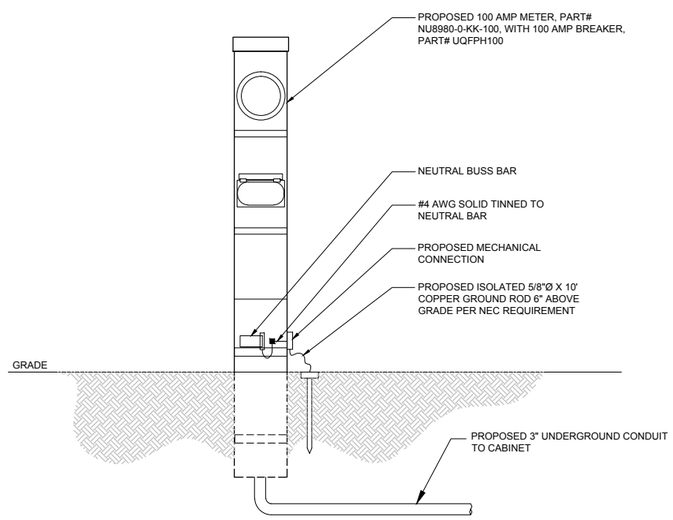

100 AMP METER PEDESTAL

SCALE: N.T.S.

5

WALL CONSTRUCTION	USE
CONCRETE BLOCK (HOLLOW)	3/8"Ø HAS THREADED ROD W/ HILTI HIT HY-70 W/ SCREEN, MIN. EMBEDMENT 3 3/8"
CONCRETE (SOLID)	3/8"Ø HAS THREADED ROD W/ HILTI HIT HY-200, MIN. EMBEDMENT 3 3/8"

NOTES:
- USE STANDARD STAINLESS STEEL HARDWARE FOR WALL MOUNT AND CONNECTION OF CHANNELS
- SPACE UNITS @ 6'-0" ON CENTER

NOTE:
ALL "UNISTRUT" CHANNEL SHALL BE GALVANIZED AND COLD GALVED WHEN CUT.

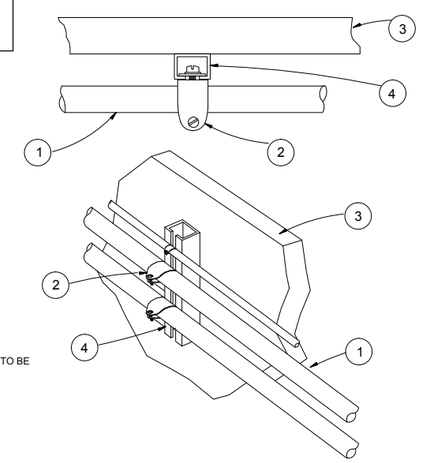

KEYNOTES:

1. CONDUIT
2. CONDUIT CLAMP "UNISTRUT"
   PART# 3"- P1119
   2"- P1117
   1-1/2"- P1115`
   1-1/4"- P1114
   1"- P1113
3. EXISTING WALL ASSEMBLY
4. VERTICAL "UNISTRUT" P1000-HS SERIES LENGTH BASED ON NUMBER OF CONDUIT TO BE MOUNTED

WALL \ SURFACE MOUNT CONDUIT DETAIL

SCALE: N.T.S.

6

ISSUE STATUS

REV.	DATE	DESCRIPTION	BY
1	08/03/15	90% CONSTRUCTION	CDL
2	09/04/15	90% REVISIONS	CDL
3	09/22/15	100% CONSTRUCTION	CDL
4	10/12/15	REVISED 100% CD	JNC
5	03/23/16	REVISED 100% CD	CLG
6	05/03/16	REVISED 100% CD	MMR

W-T COMMUNICATION DESIGN GROUP, LLC.
WIRELESS INFRASTRUCTURE
8560 S. Eastern Ave. Suite 220
Las Vegas, NV 89123
PH: (702) 998-1000 FAX: (702) 998-1010
www.wtengineering.com

COPYRIGHT © 2016 W-T COMMUNICATION DESIGN GROUP, LLC.

PROJECT #: T1600022

PROPRIETARY INFORMATION

THE INFORMATION CONTAINED IN THIS SET OF DRAWINGS IS PROPRIETARY & CONFIDENTIAL TO VERIZON WIRELESS

ANY USE OR DISCLOSURE OTHER THAN AS IT RELATES TO VERIZON WIRELESS IS STRICTLY PROHIBITED

verizon

15505 SAND CANYON AVENUE, D1
IRVINE, CA 92618

GRAPEWIN
8306 GRAPEWIN STREET
EASTVALE, CA 92880

SHEET TITLE:

ELECTRICAL DETAILS

E-4

NOTE: THE ORIGINAL SIZE OF THIS PLAN IS 30" X 24". 11"x17" PLOT WILL BE HALF SCALE UNLESS OTHERWISE NOTED

GRAPEWIN 100%CD_rev6_5.3.16.dwg

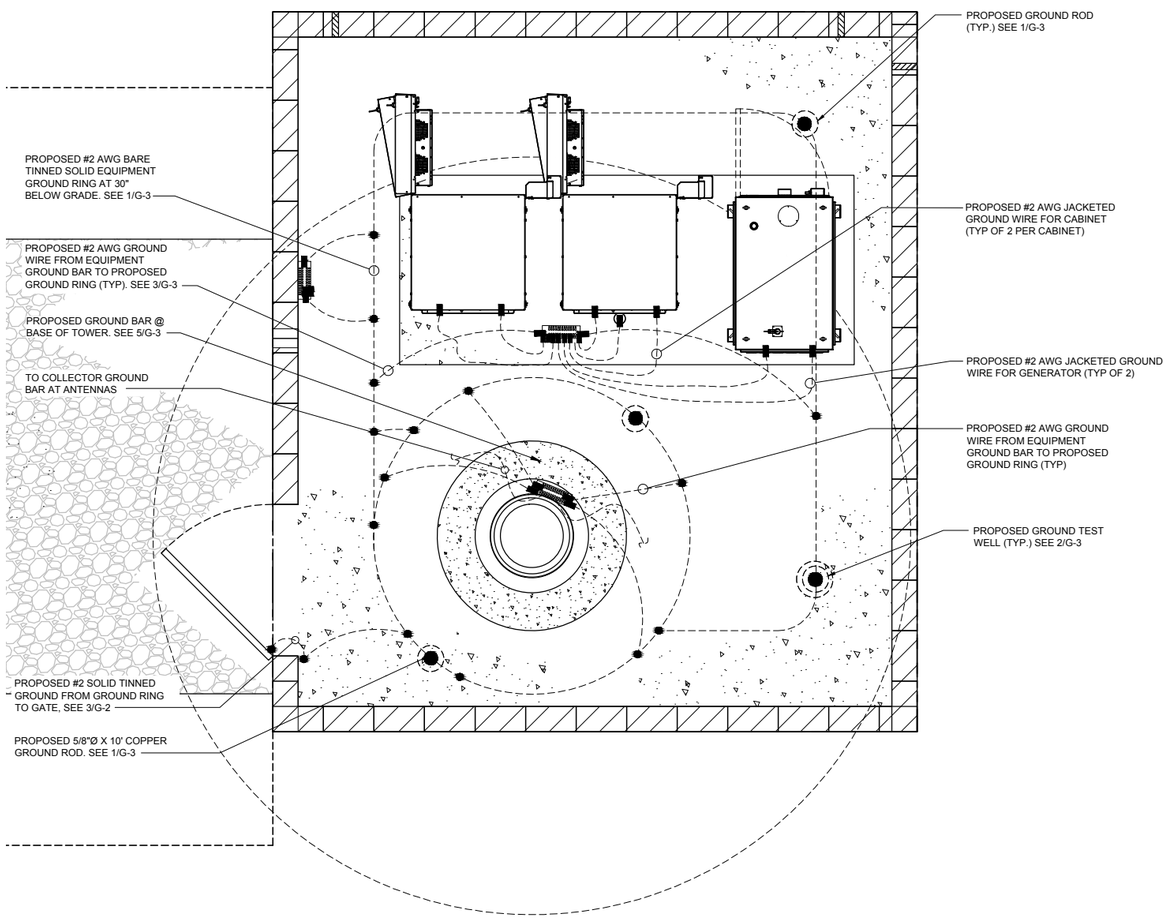

EQUIPMENT GROUNDING PLAN | SCALE: 1/2"=1'-0" | 1

#2 AWG GROUND WIRE
TEST WELL
GROUND ROD
MECHANICAL CONNECTION
CADWELD CONNECTION

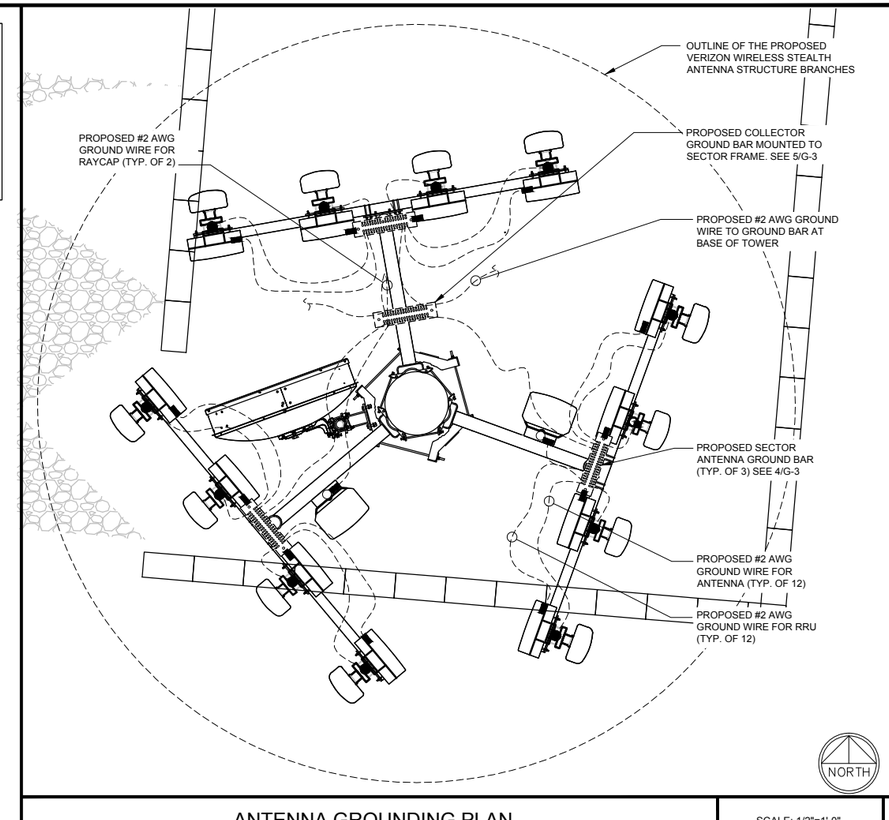

ANTENNA GROUNDING PLAN | SCALE: 1/2"=1'-0" | 2

1. ALL GROUNDING CONNECTIONS SHALL BE MADE BY THE "CADWELD" PROCESS. CONNECTIONS SHALL INCLUDE ALL CABLE TO CABLE, SPLICES, ETC. ALL CABLE TO GROUND RODS, GROUND RODS SPLICES AND LIGHTNING PROTECTION SYSTEM AS INDICATED. GROUND FOUNDATION ONLY AS INDICATED BY PM. ALL MATERIALS USED (MOLDS, WELDING, METAL, TOOLS, ETC.) SHALL BE "CADWELD" PROCESS AND INSTALLED PER MANUFACTURER'S RECOMMENDATIONS AND PROCEDURES. GROUND CONDUCTOR SHALL HAVE A MINIMUM 24" BENDING RADIUS.
2. ALL CADWELD CONNECTIONS ON GALVANIZED SURFACES SHALL BE CLEANED THOROUGHLY AND COLORED TO MATCH SURFACE WITH (2) TWO COATS OF SHERWIN-WILLIAMS GALVITE (WHITE) PAINT B50W3 (OR EQUAL) OR SHERWIN-WILLIAMS SILVERBRITE (ALUMINUM) B59S11 (OR EQUAL).
3. ALL ELECTRICAL & MECHANICAL GROUND CONNECTIONS SHALL HAVE ANTIOXIDANT COMPOUND APPLIED TO CONNECTION.
4. FENCE/ GATE:
   GROUND FENCE POSTS WITHIN 6 FEET OF ENCLOSURE AND 25 FEET OF TOWER AS INDICATED ON DRAWINGS. GROUND ALL GATE POST AND ALL CORNER POSTS. GROUND CONNECTIONS TO FENCE POSTS SHALL BE MADE BY THE "CADWELD" PROCESS AND INSTALLED PER MANUFACTURER'S RECOMMENDATIONS AND PROCEDURES. ALL OTHER CONNECTIONS FOR THE GROUND GRID SYSTEM SHALL BE MADE BY THE "CADWELD" PROCESS, AND INSTALLED PER MANUFACTURER'S RECOMMENDATIONS AND PROCEDURES.
5. UTILITY COMPANY COORDINATION:
   ELECTRICAL CONTRACTOR SHALL CONFIRM THAT ALL WORK IS IN ACCORDANCE WITH THE RULES OF THE LOCAL UTILITY COMPANY BEFORE SUBMITTING THE BID. THE CONTRACTOR SHALL CHECK WITH THE UTILITY COMPANIES SUPPLYING SERVICE TO THIS PROJECT AND SHALL DETERMINE FROM THEM ALL EQUIPMENT AND CHARGES WHICH THEY WILL REQUIRE AND SHALL INCLUDE THE COST IN THE BID.
6. GROUND TESTS:
   GROUND TESTS SHALL BE PERFORMED AS REQUIRED BY LESSEE STANDARD PROCEDURES. GROUND GRID RESISTANCE SHALL NOT EXCEED 5-OHMS.
7. CONTRACTOR SHALL SUBMIT THE GROUND RESISTANCE TEST REPORT AS FOLLOWS:
   1. ONE (1) COPY TO OWNER REPRESENTATIVE
   2. ONE (1) COPY TO ENGINEER

GROUNDING NOTES | SCALE: N.T.S. | 3

ISSUE STATUS

REV.	DATE	DESCRIPTION	BY
1	08/03/15	90% CONSTRUCTION	CDL
2	09/04/15	90% REVISIONS	CDL
3	09/22/15	100% CONSTRUCTION	CDL
4	10/12/15	REVISED 100% CD	JNC
5	03/23/16	REVISED 100% CD	CLG
6	05/03/16	REVISED 100% CD	MMR

W-T COMMUNICATION DESIGN GROUP, LLC.
WIRELESS INFRASTRUCTURE
8560 S. Eastern Ave. Suite 220
Las Vegas, NV 89123
PH: (702) 998-1000 FAX: (702) 998-1010
www.wtengineering.com
COPYRIGHT © 2016 W-T COMMUNICATION DESIGN GROUP, LLC.
PROJECT #: T1600022

PROPRIETARY INFORMATION
THE INFORMATION CONTAINED IN THIS SET OF DRAWINGS IS PROPRIETARY & CONFIDENTIAL TO VERIZON WIRELESS
ANY USE OR DISCLOSURE OTHER THAN AS IT RELATES TO VERIZON WIRELESS IS STRICTLY PROHIBITED

verizon
15505 SAND CANYON AVENUE, D1
IRVINE, CA 92618

GRAPEWIN
8306 GRAPEWIN STREET
EASTVALE, CA 92880

SHEET TITLE:
EQUIPMENT & ANTENNA GROUNDING PLAN

G-1

NOTE: THE ORIGINAL SIZE OF THIS PLAN IS 30" X 42". 11"x17" PLOT WILL BE HALF SCALE UNLESS OTHERWISE NOTED

GRAPEWIN 100%CD_rev6_5.3.16.dwg

NOT USED | SCALE: NONE | 1

NOT USED | SCALE: NONE | 2

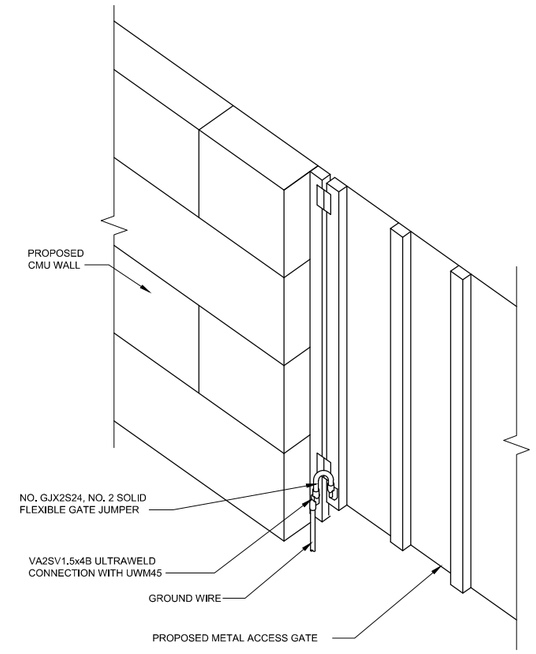

GATE GROUNDING DETAIL | SCALE: NONE | 3

NOT USED | SCALE: NONE | 4

NOTE:
THE FOLLOWING DETAILS SHOWN ARE HARGER ULTRAWELD EXOTHERMIC CONNECTIONS WITH PART NUMBERS BELOW. THESE CONNECTIONS MAY BE CROSS-REFERENCED WITH CADWELD CONNECTIONS WHICH ARE SHOWN.

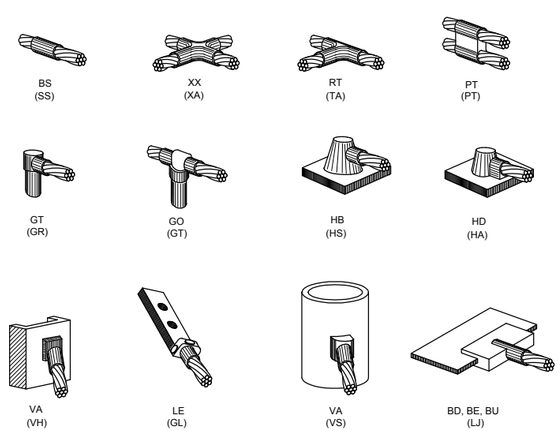

TYPICAL EXOTHERMIC WELD CONNECTIONS | SCALE: NONE | 5

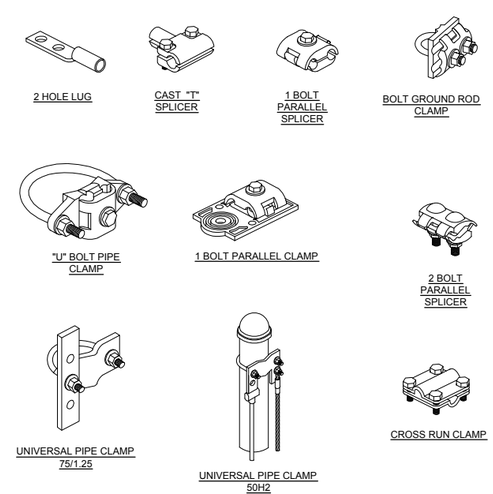

TYPICAL MECHANICAL CONNECTIONS | SCALE: NONE | 6

ISSUE STATUS

REV.	DATE	DESCRIPTION	BY
1	08/03/15	90% CONSTRUCTION	CDL
2	09/04/15	90% REVISIONS	CDL
3	09/22/15	100% CONSTRUCTION	CDL
4	10/12/15	REVISED 100% CD	JNC
5	03/23/16	REVISED 100% CD	CLG
6	05/03/16	REVISED 100% CD	MMR

W-T COMMUNICATION
DESIGN GROUP, LLC.
WIRELESS INFRASTRUCTURE
8560 S. Eastern Ave. Suite 220
Las Vegas, NV 89123
PH: (702) 998-1000 FAX: (702) 998-1010
www.wtengineering.com

COPYRIGHT © 2016 W-T COMMUNICATION DESIGN GROUP, LLC.

PROJECT #: T1600022

PROPRIETARY INFORMATION

THE INFORMATION CONTAINED IN THIS SET OF DRAWINGS IS PROPRIETARY & CONFIDENTIAL TO VERIZON WIRELESS

ANY USE OR DISCLOSURE OTHER THAN AS IT RELATES TO VERIZON WIRELESS IS STRICTLY PROHIBITED

verizon

15505 SAND CANYON AVENUE, D1
IRVINE, CA 92618

GRAPEWIN
8306 GRAPEWIN STREET
EASTVALE, CA 92880

SHEET TITLE:

GROUNDING DETAILS

G-2

NOTE: THE ORIGINAL SIZE OF THIS PLAN IS 30" X 24", 11"x17" PLOT WILL BE HALF SCALE UNLESS OTHERWISE NOTED

GRAPEWIN 100%CD_rev6_5.3.16.dwg

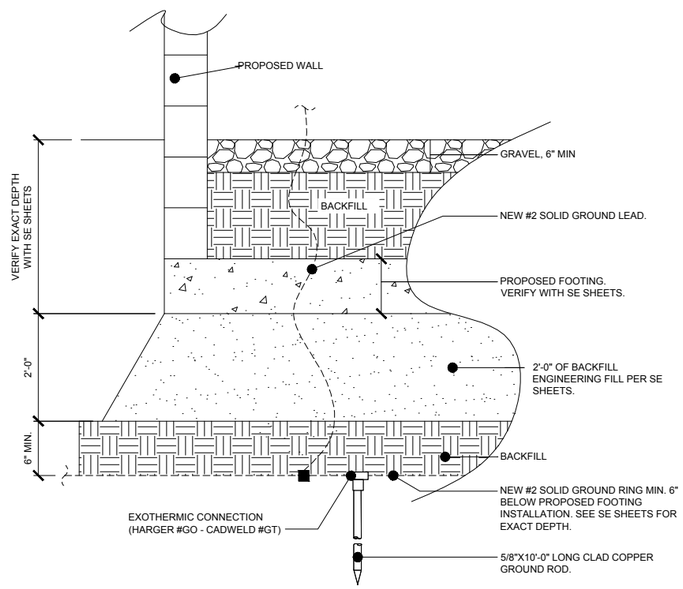

GROUND RING | SCALE: NONE | 1

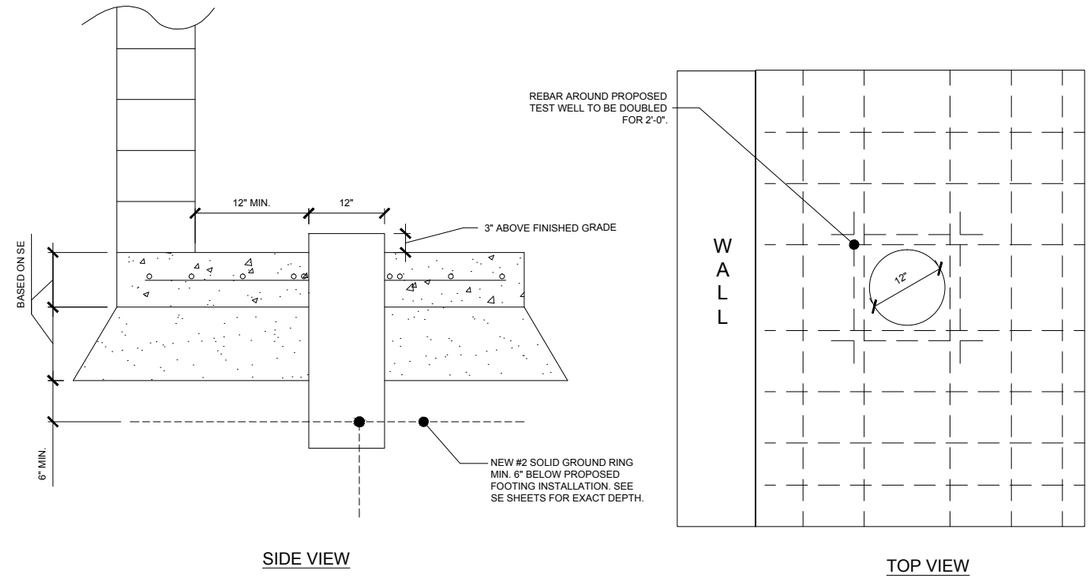

TEST WELL | SCALE: NONE | 2

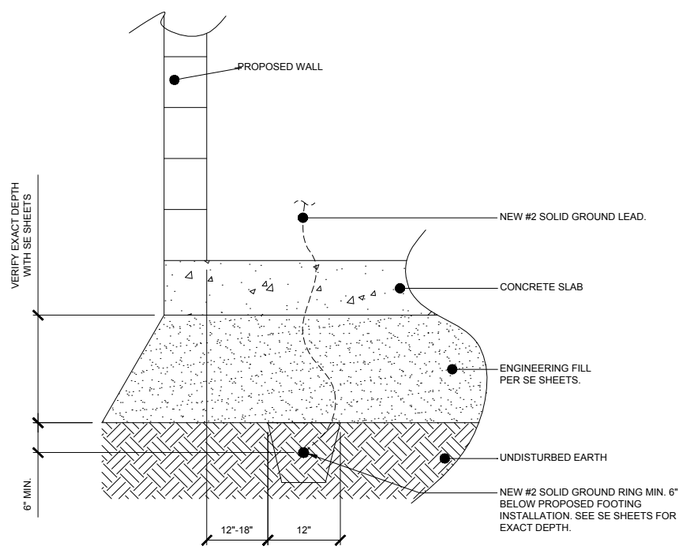

NOTE:
CONTRACTOR TO BACKFILL & COMPACT GROUND RING TRENCH TO ENSURE GROUND RING IS COVERED WITH EARTH MATERIAL.

GROUND RING DEPTH | SCALE: NONE | 3

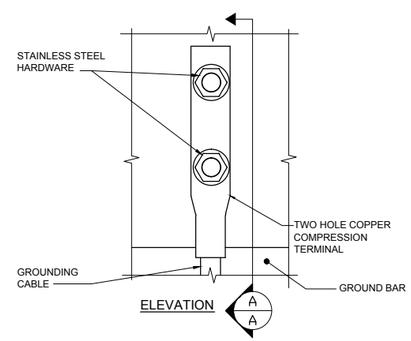

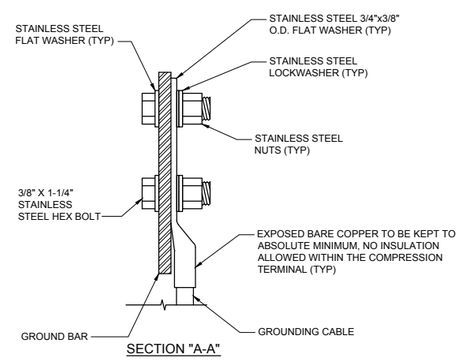

1. OXIDE INHIBITING COMPOUND TO BE USED AT ALL LOCATIONS
2. NO CRIMPING OF SOLID #2. USE EXOTHERMIC WELD ONLY

TYPICAL GROUND BAR CONNECTION DETAIL | SCALE: NONE | 4

KEY NOTES:

1.	1/4" THK ELECTRICAL TINNED GROUND BAR HARGER OR APPROVED EQUAL. HOLE CENTERS TO MATCH NEMA DOUBLE LUG CONFIGURATION
2.	INSULATORS (UNLESS NOTED OTHERWISE)
3.	3/8" STAINLESS STEEL LOCKWASHERS
4.	WALL MOUNTING BRACKET
5.	3/8" STAINLESS STEEL BNLF BOLTS
6.	EXOTHERMICALLY WELD #2 AWG BARE TINNED SOLID COPPER CONDUCTOR TO GROUND BAR. ROUTE CONDUCTOR TO BURIED GROUND RING AND PROVIDE PARALLEL EXOTHERMIC WELD
7.	CONTRACTOR SHALL USE PERMANENT MARKER TO DRAW THE LINES BETWEEN EACH SECTION AND LABEL EACH SECTION ("P", "A", "N", "I") WITH 1" HIGH LETTERS

NOTES:
-EXTERIOR GROUND BARS TO BE TIN PLATED
-HARDWARE SHALL BE STAINLESS STEEL
-CONTRACTOR SHALL GROUP INCOMING WIRES
-CONTRACTOR TO APPLY 'KOPR-SHIELD' TO ALL CONNECTIONS

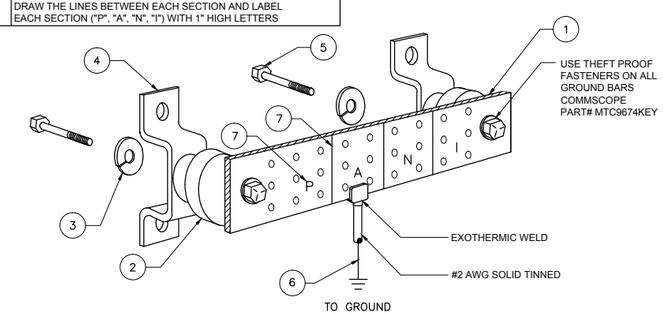

EACH GROUND CONDUCTOR TERMINATING ON ANY GROUND BAR SHALL HAVE AN IDENTIFICATION TAG ATTACHED AT EACH END THAT WILL IDENTIFY ITS ORIGIN AND DESTINATION

SECTION "P" - SURGE PRODUCERS

- COLLECTOR GROUND BAR
- GENERATOR FRAMEWORK (IF AVAILABLE)
- TELCO GROUND BAR
- COMMERCIAL POWER COMMON NEUTRAL/GROUND BOND
- FIBER GROUND BAR
- EQUIPMENT ROOM COLLECTOR GROUND BAR
- HVAC
- RECTIFIER FRAMES

SECTION "A" - SURGE ABSORBERS

- INTERIOR GROUND RING
- EXTERNAL EARTH GROUND FIELD (BURIED GROUND RING)
- METALLIC COLD WATER PIPE (IF AVAILABLE)
- BUILDING STEEL (IF AVAILABLE)
- AC POWER

SECTION "N" - NON-ISOLATED GROUND ZONE EQUIPMENT

- MISCELLANEOUS NON-ISOLATED GROUND ZONE EQUIPMENT
- CABLE TRAY SYSTEM
- EQUIPMENT FRAMES
- BATTERY RACKS
- DC POWER

SECTION "I" - ISOLATED GROUND ZONE

- ISOLATED EQUIPMENT FRAMES
- ISOLATED GROUND BAR - IGB

GROUND BAR DETAIL | SCALE: NONE | 5

ISSUE STATUS

REV.	DATE	DESCRIPTION	BY
1	08/03/15	90% CONSTRUCTION	CDL
2	09/04/15	90% REVISIONS	CDL
3	09/22/15	100% CONSTRUCTION	CDL
4	10/12/15	REVISED 100% CD	JNC
5	03/23/16	REVISED 100% CD	CLG
6	05/03/16	REVISED 100% CD	MMR

W-T COMMUNICATION DESIGN GROUP, LLC.
WIRELESS INFRASTRUCTURE
8560 S. Eastern Ave. Suite 220
Las Vegas, NV 89123
PH: (702) 998-1000 FAX: (702) 998-1010
www.wtengineering.com
COPYRIGHT © 2016 W-T COMMUNICATION DESIGN GROUP, LLC.
PROJECT #: T1600022

PROPRIETARY INFORMATION
THE INFORMATION CONTAINED IN THIS SET OF DRAWINGS IS PROPRIETARY & CONFIDENTIAL TO VERIZON WIRELESS
ANY USE OR DISCLOSURE OTHER THAN AS IT RELATES TO VERIZON WIRELESS IS STRICTLY PROHIBITED

verizon

15505 SAND CANYON AVENUE, D1
IRVINE, CA 92618

GRAPEWIN
8306 GRAPEWIN STREET
EASTVALE, CA 92880

SHEET TITLE:
GROUNDING DETAILS

G-3

NOTE: THE ORIGINAL SIZE OF THIS PLAN IS 30" X 24" - 11"x17" PLOT WILL BE HALF SCALE UNLESS OTHERWISE NOTED

Eastvale Planning: Major Projects Summary

May 19, 2016

Highlighted Text = Updated Information[1]

Map ID	Project	Notes	Current Activity
1.	**KB Homes – The Lodge, Residential Development** **Project No. 10-0124** NWC of Limonite Avenue and Scholar Way 205 detached single-family homes Planner: Kanika Kith	Minor Development Review for final site of development **Approved** on June 10, 2014 Amendment to an approved development plan to add tempered glass panels to the top of a previously approved 3- to 4-foot-high block wall around the patio area to an overall height of up to 6.5 feet for the new homes along Scholar Way in "The Lodge" residential development -- **Approved** by PC March 18, 2015 Received revisions for 4 Pack "Serene" to reduce the size of the homes on September 21, 2015. Also new application to development Phase II received on September 21, 2015. Approved TUP for the construction of a new set of Serene (4-pack) model complex on November 30, 2015. Approved revised construction plans for Serene Master Home Plan on December 1, 2015. Approved Phase II Master Home Plan on December 3, 2015. Received HOA Landscape Maintained Areas for the northern portion on March 15, 2016.	Under construction Symmetry model homes now open
2.	**Goodman Commerce Center (formally Lewis Eastvale Commerce Center)** **Project No. 11-0271** ****see also Project No. 15-0551 (No. 22 on this list)**	**Approved** by City Council on November 12, 2014 **Groundbreaking held May 20, 2015.** Landscape plans for Building 1 & 2 approved on November 11, 2015. Building permits issued for two industrial buildings.	Under construction

[1] New projects are added at the bottom of the list as they are submitted.

Map ID	Project	Notes	Current Activity
	190 acres +/- between Bellegrave and Cantu-Galleano Road General Plan Amendment, Change of Zone, and Specific Plan to provide for a mix of warehousing, light industrial, office, and retail uses. CEQA: Environmental Impact Report (certified) Planner: Eric Norris/Cathy Perring	Off-site common area landscape plans approved on December 4, 2015. Basin and Bellegrave Ave. landscape plans approved on December 18, 2015. Received Hamner Ave. landscape plans on January 14, 2016. Applicant has requested revisions to the approved Development Plan and conditions of approval to accommodate a potential tenant for the building currently under construction. City Council approved the request on April 13, 2016. Received revised construction plans for Building #2. Provided comments to architect on April 18, 2016. Received basin fixture landscape plans on April 13, 2016 and under review. City Council on April 13 approved changes to the conditions of approval affecting Building B Tenant Improvements submitted for Building 2/B. Plans were reviewed and approved, and the tenant is scheduled to begin improvements in Mid-June. Due to confidentiality requirements, the name of the tenant can not be released at this time.	
3.	**D.R. Horton – The Trails, Planned Residential Development Residential Subdivision Project No. 11-0558** Northwest corner of Archibald and 65th General Plan Amendment, Change of Zone, Tentative Tract Map, and Planned Residential Development for 256 dwelling units with a 5-acre park. CEQA: Mitigated Negative Declaration	Approved by City Council on May 22, 2013. Approved monument signs on March 10, 2016.	Project is under construction.

Map ID	Project	Notes	Current Activity
	Planner: Kanika Kith		
4.	**Walmart – Eastvale Crossings** **Project No. 12-0051** Southeast corner of Limonite and Archibald (APNs 144-030-028, -012, -014) Proposal for the development of a 177,000 +/- sq. ft. retail store and several outparcels on 23.37 acres CEQA: EIR Planners: Eric Norris	Project was reviewed by the Riverside County Airport Land Use Commission and received a conditional finding of conformance with the Chino Airport Land Use Compatibility Plan. Release of the Draft EIR is on hold pending a determination on how to address the issue of greenhouse gas emissions. Updated administrative review draft of the EIR is expected in late May. No tentative date for the release of the Draft EIR for public review is available.	No tentative hearing date
5.	**Lennar – Estancia, Planned Residential Development Subdivision** **Project No. 12-0275** South of Citrus Street, West of Scholar Way APN(s): 152-040-040,152-040-026 & 152-030-006 Tentative Tract Map, Change of Zone, and Planned Residential Development that combine the two previously approved subdivisions (Gary Dou Residential subdivision and Proactive Engineering subdivision). Planner: Kanika Kith	Approved by City Council on April 24, 2013	Project is under construction.
6.	**Lennar – Mill Creek Crossing, Planned Residential Development Subdivision** **Project No. 12-0297** SEC Chandler/Hellman Minor Development Plan Review for the development of a Master Home Plan for the "Mill	MDP and TUP approved November 17, 2014. Received revisions for precise grading plans Phase 5 and master home plan on September 23, 2015. Approved revisions for precise grading plans Phase 5 and master home plan on October 8, 2015.	Project is under construction.

Map ID	Project	Notes	Current Activity
	Creek Crossing at Eastvale" residential development of 122 single family dwelling units for Tract 29997 Planner: Kanika Kith		
7.	**Providence Business Park** **Project No. 12-0750** Project Location: 144-010-002, -033, -037, & -038 (West of Archibald and approximately 750 ft south of Limonite Ave) MDR, ZC, TPM for the development of a business park consisting of 14 new industrial buildings ranging from 12,850 square feet to 129,000 square feet and associated improvements on 53.37 gross acres of vacant land (former Bircher's site). CEQA: EIR Addendum Planner: Kanika Kith	Approved by CC on April 9, 2014 Project has been sold to new owners, who have met with staff to discuss implementing the approved development plans. Public Works Department is processing the final map for this project. Planning has been contacted by the new owner regarding potential changes to the office portion of the project, but no application for a change has been filed.	Road improvements under construction on Archibald Avenue.
8.	**D.R. Horton – Copper Sky, Residential Subdivision** **Project No. 13-0395** SEC of Schleisman and Scholar Way Minor Development Plan Review for a Master Home Plan for "Copper Sky at Eastvale" residential development. Planner: Kanika Kith	Received revised construction plans on December 30, 2015 and approved revised construction plans on January 5, 2016. Received revised design package on January 5, 2016. Received revised model home complex plans on January 19, 2016. Received TUP model home complex plans on January 26, 2016. Received revised wall and fence plans on January 27, 2016. Received setback adjustment application on February 4, 2016. Received typical landscape plans for Copper Heights on February 15, 2016.	Under construction.

Map ID	Project	Notes	Current Activity
		Sent approval letter for TUP of model homes and sales office of lots 173-175, setback adjustments, and FSOD on February 25, 2016. On May 12, 2016, the applicant submitted proposed elevation changes to house Plans 7-9. Plans are under review.	
9.	**Stratham Homes, GPA/CZ** **Project No. 13-0632** 10-acre site is located north of Orange Street, south of Schleisman Road and east of Sumner Avenue (APN 152-040-001) Proposed General Plan Amendment and Change of Zone change the land use designation of this parcel from commercial to residential CEQA: GP EIR Addendum Planner: Cathy Perring	CC denied project without prejudice on January 28, 2015. March 11, 2015—Met with the applicant to discuss a new residential proposal for the site. Staff provided initial feedback; applicant will revise and bring back a formal submittal. February 12, 2016 – Applicant met with City staff to discuss potential residential project for this site. No application is expected to be filed in the foreseeable future.	Waiting for formal submittal
10.	**99 Cents Only Store** **Project No. 13-1601** NWC Hamner Ave. and A Street Major DP for new 19,104 SF stand alone retail building on 2.67-acres. CEQA: Mitigated Negative Declaration Planner: Cathy Perring/Kanika Kith	Planning Commission approved on June 17, 2015. Provided comments to Building and Public Works departments on July 6, 2015 for review of grading plan and construction drawings. Received on-site improvements and precise grading plans from Public Works on September 10, 2015. Provided planning comments to Public Works and Building on September 22, 2015. Approved revised lighting plans on 11/17/15. Project is in the process of being purchased by a new owner, who intends to build the approved store.	Building Permit Review

Map ID	Project	Notes	Current Activity
		Planning has had initial discussions with the owner regarding plans for the northern portion of the property, but no application has been filed.	
11.	**Panera Bread with Drive-Through** **Project No. 13-1748** Eastvale Gateway South (Shops 2) Major Development Plan and Conditional Use Permit modify an approved retail building (Shop 2) in the Eastvale Gateway South retail center to accommodate a drive-through facility for Panera Bread CEQA: Categorical Exemption Planner: Kanika Kith/Malinda Lim	Approved at Planning Commission on January 7, 2015 Store opened in December 2015. Staff met with Lewis and Panera on January 14, 2015 to discuss directional signage for the drive-through operation to improve traffic flow. Lewis presented a conceptual revised drive-through and signage plan on February 3, 2016. Staff reviewed the conceptual plan, and directed the applicant to submit construction plans, which to date have not been submitted. Planning is following up.	In operation
12.	**William Lyons Homes – Nexus Residential Development** **Project No. 14-0046** Tentative Tract Map No. 36446 and Major Development Review for a residential development (Nexus) consisting of 220 townhomes and a recreation area on a vacant 10-acre lot behind 24-hour Fitness Center in the Eastvale Gateway South retail center Planner: Kanika Kith	Approved by PC October 15, 2014 Model homes opened 9/19/15.	Project under construction. Model homes opened 9/19/15.
13.	**LBA Realty Industrial Building** **Project No. 14-1077** NEC of Cantu-Galleano Ranch Road and Hamner Avenue. APN 160-020-033 and 156-050-025. 4560 Hamner Avenue within the I-P zoning district.	Formal application submitted on October 20, 2014. 6/4/15 Comment letter sent to applicant re: January 26, 2015 resubmittal package. Revised development plans received July 14, 2015. Traffic study and landscape plans received in August. Met on July 29, 2015 to discuss shared access with Grainger and applicant.	Planning Commission approval on April 20, 2016

Map ID	Project	Notes	Current Activity
	Major Development Review for a 446,173 sq. ft. industrial building on APN 160-020-033 (approximately 24 acres) and overflow parking on APN 156-050-025. CEQA: EIR Planner: Cathy Perring/Kanika Kith	Comment letter sent to applicant regarding all July and August submittals on October 12, 2015. Admin Draft EIR received from consultant August 31, 2015. Sent to consultant and applicant with City comments on October 12, 2015. Draft EIR 45-day review period ends Monday, January 25. At-risk building plans submitted on January 6, 2016; civil plans submitted January 12. Comments for Draft EIR were received from six agencies. Response to Comments/FEIR being prepared. Received on-site improvement plans on February 4, 2016. Received revised improvement and landscape plans on March 10, 2016. Received 2nd submittal for construction building plans on March 17, 2016. Landscape plans have been submitted and are currently under review. The applicant has been submitting information verifying compliance with conditions of approval.	
14.	**Stratham Homes – Sendero, Planned Residential Development** **Project No. 14-1398** ****See Project No. PLN 15-06023 (No. 30 on the list)** NW corner Limonite and Harrison; APN 164-010-017 General Plan Amendment, Change of Zone, Planned Residential Development, and Tentative Tract Map for the subdivision of approximately	Planning Commission on May 20, 2015 voted to recommend approval of GPA, Change of Zone, and PRD, and denial of TTM due to too many units. City Council on June 10, 2015 voted 3-0 adopting the MND and approving GPA, Change of Zone, PRD, and TTM subject to not using SCE easement or the City right-of-way to satisfy ALUC open space requirement. Meeting on July 22, 2015 to discuss revised site plan with applicant. Revised site plan presented to City Council on September 9, 2015 and Council was supportive of the revised site layout.	Approved by CC on June 10, 2015 In Review

Map ID	Project	Notes	Current Activity
	44 acres into 323 residential lots and 14 lots for open space and water basins CEQA: Mitigated Negative Declaration Planner: Kanika Kith	The applicant submitted a parcel map to divide the site into 4 parcels for financing purposes. See notes for Project No. PLN 15-06023 for more information regarding the review of the Parcel Map. Applicant submitted first Master Home Plan on April 6, 2016. Planning and Public Works met with the applicant to discuss the phasing of public improvements and how this would be shown on exhibits to accompany the proposed parcel map. To date, these exhibits have not been received.	
15.	**AT&T – River Road, New Disguised Wireless Facility** **Project No. 14-2832** SEC at Hall and River Roads, west of Baron Drive Minor Development Plan application for a 70-foot tall disguised wireless facility and a 138 square-foot equipment shelter located at 14700 River Road Planner: Kanika Kith	Planning Director approval on July 15, 2015. Received construction plans on March 8, 2016. Provided comments to applicant on March 23, 2016.	Building Permit Review Awaiting for revised construction plans.

Map ID	Project	Notes	Current Activity
16.	**Verizon – Community Park, New Disguised Field Light Wireless Facility** **Project No. 14-3325** South of Citrus Street, and west of Hamner Avenue within the Eastvale Community Park – 12750 Citrus Street Minor Development Plan application for the construction of a 70-foot tall wireless facility disguised as a field light and an approximate 469 square-foot equipment shelter within the Eastvale Community Park at 12750 Citrus Street Planner: Kanika Kith/Malinda Lim	Submitted on November 25, 2014; comment letter sent December 24, 2014 Last correspondence with applicant on March 2, 2015, change of location for tower and enclosure Revised plans received on July 30, 2015. Comments to be provided to applicant by August 29, 2015. Comments provided to applicant on August 27, 2015. Additional landscape comments provided to applicant on September 8, 2015. Staff met with applicant on September 17, 2015 to discuss items addressed in comment letter. Applicant submitted revised plans on 11/9/15 and was informed to provided additional information requested in the comment letter.	In review
17.	**Verizon – Providence Park, New Disguised Field Light Wireless Facility** **Project No. 14-3326** South of Hollowbrook Way, west of Woodpigeon Road, north of Aspen Leaf Lane, and east of Cobble Creek Drive within Providence Ranch Park – 7250 Cobble Creek Drive Minor Development Plan application for a 25-foot long wireless antenna to be installed on an existing 70-foot tall field light and for the construction of an approximate 469 square-foot equipment shelter within Providence Ranch Park at 7250 Cobble Creek Drive Planner: Kanika Kith/Malinda Lim	Submitted on November 25, 2014; comment letter sent December 24, 2014 Last correspondence with applicant on March 2, 2015, change of location for tower and enclosure Comments on revised plans provided to applicant on August 11, 2015. Applicant provided updates photo simulation photos on December 1, 2015. Awaiting for other submittal materials.	Waiting submittal of incomplete items.

Map ID	Project	Notes	Current Activity
18.	**Chandler Catholic Church** **Project No. 15-0175** 14395 Chandler Street APNs: 144-121-005, 144-130-008, 144-130-009, and 144-130-010 Pre-Application Review to be located at 14395 Chandler Street (4 individual parcels owned by 3 separate owners) within the C-1/C-P and A-1 zoning districts. Project Planner: Cathy Perring	Applicant working with ALUC on required approval of proposed occupant density in the sanctuary. As of April 2016, the City has not received an application from the church. City staff will be meeting with the church on May 26 to discuss the project.	Pre-Application Complete
19.	**Goodman Commerce Center Business Park NEC of Bellegrave/Hamner** **Project No. 15-0551** ****see Project No. 11-0271 (No. 2 on this list)** Proposal for the development of the Business Park. The development will include 8 buildings and approximately 191,356 SF. The development will accommodate professional offices, light industrial and light assembly uses. Project Planner: Eric Norris/Kanika Kith	Planning Commission approval on August 5, 2015. Project Approval letter send on August 11, 2015 Applicant submitted first set of construction drawings for all eight buildings on October 8. Planning review of six buildings complete on October 13, 2015. Additional sets of construction drawings received and distributed for internal review on October 12, 2015. Applicant submitted second set of construction drawings for all eight buildings on December 1, 2015. Provided comments on December 15, 2015; awaiting corrections. Received revised construction plans for Buildings 1-8 on January 20, 2016. Approved by Planning on January 30, 2016. Received CDA well site construction and landscape plans. Received revised elevations for Building 3 and Building 4 and provided comments to applicant on April 18th. On April 24th, applicant provided revised elevation for Buildings 3 and 4. Planning approved revised elevation on April 24th. Revised elevations will be included in the construction drawings.	Building Permit Review

Map ID	Project	Notes	Current Activity
20.	**Asset Solutions Group – Residential Development at Hamner and Schleisman Road (Polopolus Property)** **Project No. 15-0576** Hamner Avenue and east of existing A Street; APN: 152-060-002 and 152-060-003 Proposal for the accommodation of approximately 125-three story detached homes to also include a right of way dedication to the City CEQA: TBD Planner: Kanika Kith	Pre-Application Review submitted February 26, 2015; distributed for review March 4, 2015; comments provided to applicant. No further activity is expected for this project.	PAR complete.
21.	**The Ranch (Commercial Portion)** **Project No. 15-0783** ****See Project No. PLN 16-00011 for The Ranch-Industrial Portion (No. 32 on the list)** Moons Site (APNs: 144-010-008-0, 144-101-013-4) and Rodriguez Site (APN: 144-010-009-1) Specific Plan Amendment (SPA) to modify existing boundaries for The Ranch SP No. 358 for Planning Areas 1 through 6, land use designation for Planning Area 5, and revisions to allowable uses. No revisions to Planning Areas 7 through 9 are being proposed. This request also included review for: Major Development Review (DP) for six (6) industrial buildings totaling 985,000 SF on six (6) parcels, Tentative Parcel Map (TPM) 36787 to divide approximately 97 gross acres into 14	Planning Commission reviewed and recommended approval to City Council on November 4, 2015. Approval letter will be sent following CEQA 30-day statute of limitation ending on January 12, 2016. No challenge was filed. Received median and parkway landscape plans on January 27, 2016. Comments provided on February 3, 2016. Revisions for landscape plans came in on March 23, 2016. See notes for Project No. PLN 16-00011 (No. 32 on the list) for information on development of the project. On February 19, 2016, a new owner purchased the six (6) light industrial business park lots that were approved on November 4, 2015 (project #32 on this list). The commercial sites will continue to be developed by the original applicant.	Approved by City Council on December 9, 2015. Second reading by City Council on January 13, 2016. Project complete

Map ID	Project	Notes	Current Activity
	legal parcels, Sign Program, and Environmental Review. Planners: Cathy Perring		
22.	**Leal Master Plan** **Special Project** This Master Plan describes the community's vision for the project area, identifies appropriate land uses, and includes the development standards that are necessary to achieve the vision, defines the character of the project's development, lists the steps involved with the development process, and provides the project's implementation plan. Planner: Eric Norris	Public Review Draft of the Leal Master Plan distributed February 2015 and currently available online (www.LealSpecificPlan.com). On September 16, 2106, the Planning Commission reviewed and recommended approval to City Council. February 2016—City will be meeting with the applicant to discuss the Master Plan and a tentative City Council hearing date. No date for Council consideration of the project has been established.	Taken off City Council 12/9/15 agenda.
23.	**Chandler Fire Station No. 31** **Project No. 15-0835** Northeast corner of Chandler and Selby. Building permit review for development of Eastvale Fire Station No. 2. Planner: Cathy Perring/Kanika Kith	Comments for landscape plans reviewed provided to Public Works on June 18, 2015. Comments for construction drawing provided to Public Works on July 7, 2015. Revised construction drawings received and approved on September 14, 2105. Ground breaking on December 8, 2015. The fire station is currently under construction.	Contact Public Works for information
24.	**Eastvale Marketplace** **Project No. 15-0958** NEC Limonite/Sumner Proposal construction of a new neighborhood retail center with multi-tenant and single tenant buildings and associated parking facilities to be located at the northeast corner of Limonite	PC approval on November 18, 2015. Appeal period end on November 30th. No appeal has been received. NOD recorded at Riverside County Recorder on November 24, 2015. Applicant is currently working with a new grocery store and other tenants. Planning has been contacted by the prospective tenant to confirm conditions of approval and other information about the project approval. Due to confidentiality, no information on the prospective tenant can be released.	PC approval on November 18, 2015

Map ID	Project	Notes	Current Activity
	Avenue and Sumner Avenue. Potential uses include grocery, banking, drug store, restaurants, general retail, service, and a tire store. Planners: Kanika Kith/Eric Norris		
25.	**Vantage Point Church** **Project No. 15-1174** ****see also Project No. 14-2322** 8500 Archibald Ave. Proposal to construct a sanctuary, church, community buildings, and associated site improvements. Planner: Kanika Kith	Formal application for Major Development Review and Conditional Use Permit submitted on May 1, 2015 Incompleteness letter sent June 1, 2015. Comment letter regarding site design sent June 24, 2015. Met with the applicant during the week of December 7th. Waiting for Public Works to get proposal for traffic study. Traffic study scope shared with applicant on January 22, 2016. Planning needs to get info to applicant regarding technical studies for CEQA. Conference call on March 10, 2016 to discuss technical studies needed for CEQA. Applicant will provide written project description to be used on all technical studies to City for review. Received payment for Traffic Consultant on April 6, 2016 and Public Works approved the Traffic Consultant to perform the work on April 19, 2016. Draft traffic study received on April 29th. Comments provided on May 9th to include the project description in the traffic study. Applicant provided revised project description on May 18th and was forwarded to the traffic consultant to include in the traffic study.	Waiting for additional materials
26.	**JCSD Community Park – Phase II** **Project No. 15-1273** SWC of Hamner Avenue and Citrus Street	Construction drawings set received for review on 6/22. Reviewing construction set for compliance with COAs and MMRP.	In building permit process In review

Map ID	Project	Notes	Current Activity
	Building permit review for development of Phase II. Planner: Kanika Kith/Yvette Noir	Landscape comments provided to applicant on July 17, 2015. Comments of missing items per COAs and MMRP provided to Building Department on July 28, 2015 Received construction landscape plans on March 9, 2016. Provided comments and redlines to applicant on March 25, 2016. Received grading plan and revised construction drawings on March 22, 2016 and comments provided on April 14, 2016. Planning and Public Works have been meeting with JCSD and the property owner across whose land a portion of the park's entry road would be constructed to resolve issues related to an easement for the roadway.	
27.	**New City Hall Building** SWC of Hamner and Riverboat Planner: Cathy Perring/Kanika Kith	Assisted Public Works - notices for community workshop sent on June 30, 2015.	Contact Public Works for information
28.	**Two industrial buildings on Hamner and Riverside** **Project No. 15-1508** SEC of Hamner Avenue and Riverside Drive (APN 156-040-087 and -088) Major Development Review for two new industrial buildings (40,000 sq ft. and 115,000 sq. ft.) to be located on two parcels behind the vacant lot (Chevron Site) Planner: Kanika Kith	No appeal and approval letter sent to applicant on March 31, 2016. Construction drawings for both buildings were received on April 27th. Comments provided on May 19, 2016.	PC approval on March 16, 2016.
29.	**Verizon on Grapewin** **Project No. 15-1662** Vacant lot located at 8306 Grapewin Street Minor Development Review for the development of a new wireless telecommunication facility	Application received on July 7, 2015. Project was deemed incomplete and requested additional information on August 6, 2015. Resubmittal received on September 3, 2015. Comments to be provided to applicant by October 3, 2105.	Planning Commission meeting on May 18, 2016 and continued to June 15, 2016.

Map ID	Project	Notes	Current Activity
	disguised as a 50 feet tall monopalm consisting of 12 antennas, one parabolic antenna, and associated equipment. Planner: Kanika Kith/Morgan Weintraub	Re-submittal and FAA clearance letter received on October 22, 2015. Comment letter sent to applicant on November 2, 2015. Awaiting for additional submittal materials. Biological study provided on February 29, 2016 and has been determined acceptable by the City. Staff is working on finalizing the development plans for consideration by the Planning Director. Notice sent to nearby property owners on April 6, 2016 and received two requests for a public hearing. Project is schedule for Planning Commission consideration on May 18, 2016. Staff is preparing the staff report. The project was presented to the Planning Commission on May 18, 2016. A number of residents in the area came to the meeting to express their concerns about the potential health impacts of the tower. The applicant provided information about federal safety standards. The Commission voted 3-0 to continue the public hearing to the June 15 PC meeting to have the entire commission (members Oblea and Patel were absent) to hear the testimony and take part in the decision-making process.	
30.	**Sendero Tentative Parcel Map** **Project No. PLN 15-06023** ****See Project No. 14-1398 (No. 14 on the list)** NW corner of Limonite Ave. and Harrison Ave. APN: 164-010-025 Planner: Kanika Kith	Submitted application on December 16, 2015, but missing tentative map. Applicant provided tentative map on December 23, 2015. Project distributed to other departments for review. Meeting with applicant to discuss project on February 11, 2016. Feb 12, 2016 – Staff meet with the applicant to discuss the proposed parcel map and related issues of phasing and the construction of infrastructure (roads, trails, water/sewer lines, etc.) Provided comments to applicant about proposing phasing on March 4, 2016.	In Review

Map ID	Project	Notes	Current Activity
		Met with applicant on April 6, 2016 to discuss comments provided. Met with Public Works to discuss proposed Parcel Map and Phased TTM on April 13, 2016. Will meet with applicant during the week of April 25th to discuss outcome of internal staff meeting. Met with applicant on April 25, 2016 to discuss missing information for processing of the Parcel Map and Phased TTM. Informed the applicant to provide an exhibit or a table identify which infrastructure will be improved for each phase. The applicant will also provide a language informing potential developers of bonding transfer for this development. On May 9, 2016, staff follow up with the applicant regarding the missing information requested at the April 25th meeting. Applicant is working on the missing information. This information is needed to process the application.	
31.	**Pre-Application for Assisted and Independent Living on Selby Ave.** Across Mountain View Park APN: 144-110-027 Planner: Kanika Kith	Submitted application on January 21, 2016. Distributed project to reviewing agencies and departments on January 25, 2016. Comments to be provided to applicant no later than February 25, 2016. Meeting with applicant to discuss comment letter on March 16, 2016.	Complete
32.	**The Ranch – Industrial Portion** **Project No. PLN 16-00011** **See Project No. 15-0783 for The Ranch Commercial Portion (No. 21 on the list) NE corner of Limonite Ave. and Hellman Ave. APN: 144-010-008, 144-101-013, and 144-010-009 Planner: Cathy Perring	Submitted pre-application review and plans on March 31, 2016. Routed plans to reviewing agencies. Received construction plans for Building 1-6 on April 18, 2016. Comments for review of the construction plans for Buildings 1 to 6 were provided to the applicant on May 9th.	In Review

Map ID	Project	Notes	Current Activity
33.	**Statham Mixed-Use –Pre-App Review** **Project No. PLN 16-00013** NE corner of Limonite and Archibald Pre-application review for commercial and residential development consisting of approximately 68,800 sq. ft. of commercial retail on 8.7 acres, a 250-unit apartment complex on 10 acres (25 du/ac) and 82 cluster homes (detached single-family homes) on 7.3 acres (11.2 du/ac). Planner: Kanika Kith	Pre-Application received on May 2, 2016. Project was distributed to other departments and agencies for review on May 4th and comments are due on May 18th. Planning and Public Works had an internal meeting on May 18th to discuss access to the site. Comments will be provided to the applicant during the week of May 23rd.	In Review
34.	**Extension of Time for TTM 35751** **Project No. PLN 16-00015** SE corner of Schleisman and Cucamonga Creek (behind Mayor Ike's home) Request to extend Tentative Tract Map 35751. Planner: Kanika Kith	Extension of time application received on May 16, 2016. Project was distributed to other departments agencies for review on May 19th and comment are due on June 2nd.	In Review

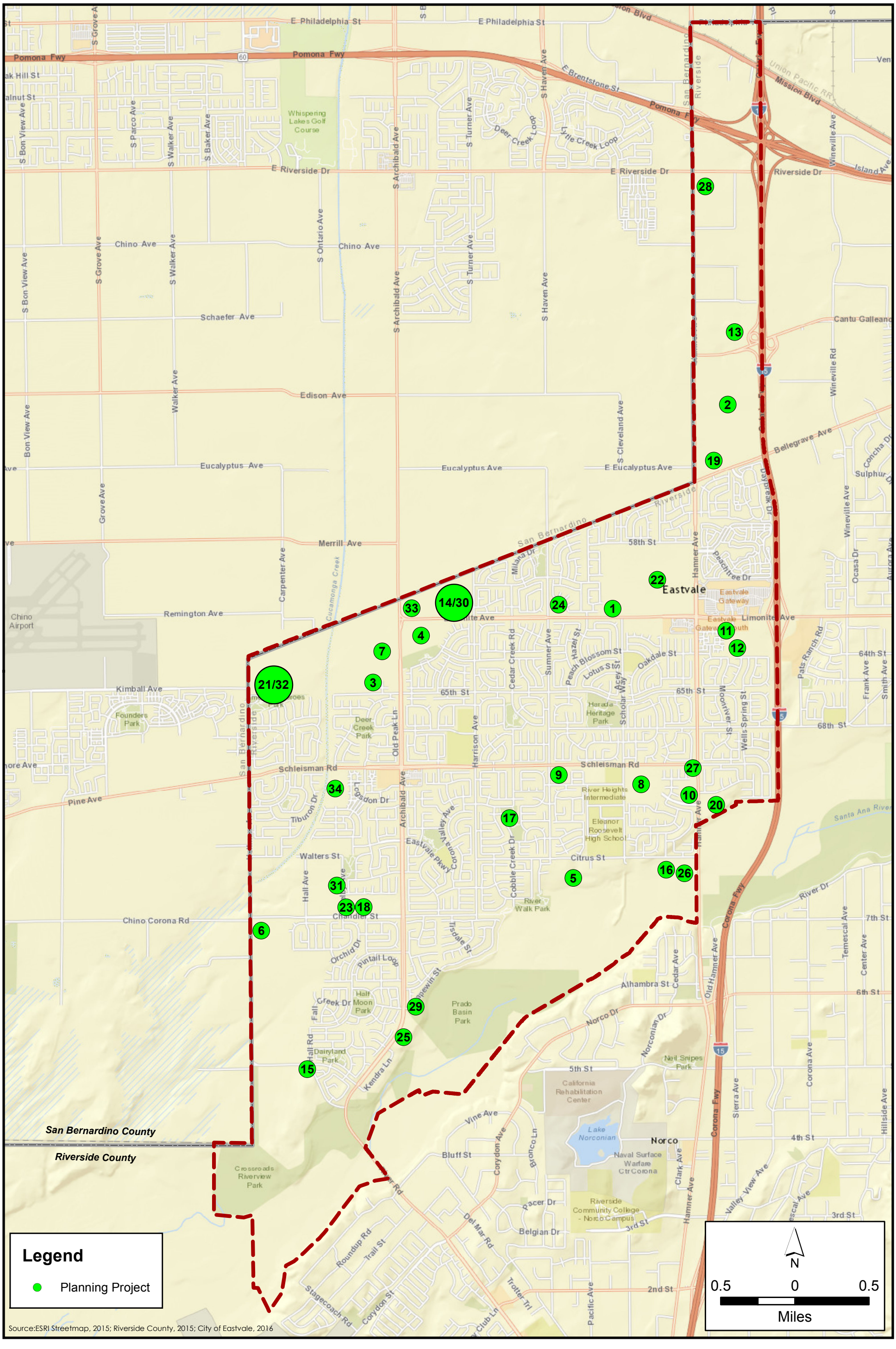

Current Projects
Eastvale Planning
May 2016